A STUDY OF CONCEPTUAL DESIGN OF AUAV WITH PORTABLE WINGS

M.Sai Dheeraj[1], Uday Kiran Poothota[2], P. Shiva Shashank[3] , P.Anush[4] , K.Sai Sudhira[5] , G. Lalitha Naga Siva Jyothi [6]

[1,2,3,4,5,6] *Department Of Aeronautical Engineering ,*

MLR Institute Of Technology and Management , Hyderabad , (India)

ABSTRACT

Agricultural flying differs in many aspects from other commercial flights. First of all it is generally executed at a very low altitude for the greater part of the flight, allowing very little room for error. In case of a manned aircraft the pilot has to fly with constant and intense attention during operational flight. Another influence of this low altitude flight is the effect of wind and turbulence. The change of wind speed with height is much more noticeable near to the ground. This gradient of wind has an effect on airplane performance directly. For example, the amount of aileron required in a turn is more critical than it has in a commercial flight. The second aspect of agricultural aviation is the highly variable loading conditions. The weight and the center of gravity can vary considerably in a very short time. This brings a need for frequent re-trimming in order to keep control forces constant. The technique for take-off and landing on a short field is also different than it is in commercial flights. Both the ambient temperature and the elevation of the field have effects on performance.

I INTRODUCTION

Agriculture in India has a significant history. Today, India ranks second worldwide in farm output. Agriculture and allied sectors like forestry and fisheries accounted for 16.6% of the GDP in 2009, about 50% of the total workforce. The economic contribution of agriculture to India's GDP is steadily declining with the country's broad-based economic growth. Still, agriculture is demographically the broadest economic sector and plays a significant role in the overall socio-economic fabric of India.

II HISTORY

Agricultural aviation is a branch of commercial aviation, which performs the essential task in production, and protection of the world’s food and fiber crops. Aerial application is also used in areas such as insect control, fighting forest fires, and protection of biological resources .There have been some significant changes in Agricultural Aviation Industry in the last 20 years. Aircrafts are getting bigger, while turbine power is becoming available for

fixed wing aircraft. Many more helicopters are being used. The techniques of aerial applications are becoming refined.

Before mid-1920s, a number of individuals began to experiment with uses of flight technology that would later become important parts of general aviation. For example, the first uses of airplanes for crop treatment, aerial surveying, and corporate flying all dated before the mid-1920s. Alfred Zimmermann, a German forester in Detershagen, was the first to identify the 'Agricultural aviation' as a means of combating crop pests. He described the use of aircraft in the application of pesticide (in this case lime-water) in the control of the nun moth (black arc moth) in the European forests in his patent letter, dated 29 March 1911. Although his approach was visionary, suitable aircraft and trained pilots who were able to perform this task were only available after the World War I. In many countries, experiments were conducted in the 1920s, and practical results were recorded by Neillie and Houster (August 1921) in the U.S.A., and Professor V. F.

Boldyrev (July 1922) in the U.S.S.R.

.Ag-1 was the first specially designed aircraft to distribute agricultural chemicals developed in 1949-50 at the Texas A.&M. Aircraft Research Centre. The project was initiated by the National Flying Farmers Association, and was carried out under the sponsorship of the Civil Aeronautics Administration, the U.S. Department of Agriculture and the Texas A&M. College System. Ag-2 and Ag-3 are other experimental aircrafts followed Ag-1. These aircrafts incorporated pilot safety characteristics with regard to field of view and structural arrangements for protection of the pilot in crashes. Thanks to these experimental aircraft, the foundations of design philosophy for nearly all subsequent specialist aircraft were laid.

The Piper Aircraft Corporation assisted in the experimental Ag-3 aircraft. This corporation was the first major aircraft manufacturer to produce a specialist aircraft – The Piper PA-25 Pawnee.

There are four main groups of aircraft used throughout the world at the present time:

Group 1: Ex-military aircraft e.g. Boeing Stearman, Grumman Avenger (TBM).

Group 2: Ex-civil aircraft, e.g. Douglas DC-6, Antonov AN-2M, DHC Beaver, Pilatus Turbo Porter, Piper Aztec.

Group 3: Specialist agricultural aircraft, i.e. piper Pawnee, Ayres Thrush, Schweizer Ag-Cat, Cessna Ag-Truck, Embraer Ipanema, Cmelak Z-37, Transavia Skyfarmer T-300, etc.

Group 4: Helicopters

Over a period of 50 years, the agricultural aircraft have shown dramatic improvement in performance and safety. DH 82 Tiger Moths was one of the first aircrafts used for dusting, spraying and spreading. It was designed as two-seater trainers. Modifications to them were many but basically involved removing the front cockpit and replacing it with a hopper. The Tiger Moth was powered by a 130hp engine and had a payload of 33 gallons of spray or 330 lb. of super-phosphate.

Fig 1.1 1950s DH82 Tiger Moth

Fig 1.2 Cessna Ag Husky

In 1960s, the DH82 Tiger Moths were replaced by such aircraft as CA28 Ceres and Transavia PL12 Airtruck, Cessna 188, Piper PA 25 Pawnee, DHC-2 Beaver, G-164

Ag Cat and the Snow Commander S-2D, to name the most numerous. By the mid 1970s, the Cessna 188 Ag Wagon (230hp), Ag Truck (300hp) or Ag Husky (310hp), became the leading models followed by the Piper PA 25 Pawnee (235hp) and PA 36 Pawnee Brave (285 & 300hp). The DHC-2 Beaver (450hp) and PAC Fletcher FU 24 dominated the fertiliser spreading business. The hopper size varied from 750L on the Ag Wagon to 1000L on the Ag Husky and from 550L on the PA-25 to 850L on the PA36. In the design of these aircrafts greater attention is paid to pilot safety. The FU24 has a dry solids capacity of just over1000 kg.

The US manufactured Air Tractor and Ayres Thrush models were introduced next. The Air Tractor AT301/2, 401/2, 501/s and 802 model numbering system followed the hopper size in US gallons. The first turbine-engined model was the 400, powered by a

Pratt and Whitney Canada PT6A-15 Ag engine with a reversible pitch propeller. A P&W CPT 6A-35 Ag turboprop engine of 750hp powers the AT-502 introduced in the late 1980s. The Ayres Thrush models are descended from the Rockwell Thrush Commander and consist of the Thrush S2R-600 (1340) powered by a P & WR-1340 radial engine; the Bull Thrush S2R-1820 and the Turbo Thrush S2R with options of a P&WC PT 6A-15, -34 and-65 turboprop engines or Garrett TPE 331-10.The Dromader (Melex M-18) is another aircraft, which is manufactured in Poland by PZL-Miele. Another agricultural aircraft is the GA-200 "Fatman" produced by
Gippsland Aeronautics at Morwell, Victoria.

III AGRICULTURAL UAV's

The phrase "Unmanned Aerospace Vehicle (UAV)" is a universally recognized term that includes a wide spectrum of aircraft that are autonomous, semiautonomous, or remotely operated. In Japan, due to the departure of younger generation from the farming communities, around 10 years ago, Yamaha company started to develop the unmanned helicopters to compensate for the shortage of land workers. These helicopters are intended to be more flexible and precise during spraying. Today, Yamaha helicopters have extended its applications area to include the insect pest control of rice paddies, soybeans, and wheat. Yamaha unmanned industrial helicopters is anticipated as a solution for various problems facing the farming communities in Japan and as a contributor to raising the level of food self-sufficiency.

Fig 1.3 Yamaha industrial – use unmanned helicopter at work

Another UAV designer is a company in USA called Tactical Aerospace Group (TAG). TAG designs and manufactures VTOL Unmanned Aerial Vehicles offering four UAV aircraft product lines, each designated for a specific market segment or application. TAG UAVs can take on the role of 'Crop Duster' when fitted with tanks of liquid pesticide and programmed to dispense the chemicals in a precise pattern over cropland. The payload capacity is in excess of 40 lbs and it has also a GPS-based flight navigation system.

IV CHALLENGES AND OPERATIONAL QUALITIES

Agricultural flying differs in many aspects from other commercial flights. First of all it is generally executed at a very low altitude for the greater part of the flight, allowing very little room for error. In case of a manned aircraft the pilot has to fly with constant and intense attention during operational flight. Another influence of this low altitude flight is the effect of wind and turbulence. The change of wind speed with height is much more noticeable near to the ground. This gradient of wind has an effect on airplane performance directly. For example, the amount of aileron required in a turn is more critical than it has in a commercial flight. The second aspect of agricultural aviation is the highly variable loading conditions. The weight and the center of gravity can vary considerably in a very short time. This brings a need for frequent re-trimming in order to keep control forces constant.

The technique for take-off and landing on a short field is also different than it is in commercial flights. Both the ambient temperature and the elevation of the field have effects on performance.

4.1 Take-Off Surface

Agricultural aircraft is usually based at a temporary airstrip. And it is not as good as a well-equipped air base. Usually a field length equal to the three times the length of the take-off run will be adequate. The nature of the surface is important because if it is a peat surface the rolling resistance of the wheels cause the take-off run to increase.

Another important factor is the gradient of the take-off surface. A windsock should be placed in a suitable position. Depending on the information obtained by the help of a windsock, like the wind direction and the force the adverse combinations, such as tailwind and uphill gradient can be avoided.

4.2 Loading

For agricultural aviation the amount of the load and its position are important in loading. A heavily loaded aircraft requires a larger take-off run. The rolling resistance of the wheels is increased and the flying speed is higher in this case. When heavily loaded, the aircraft has little performance margin. So it is better to spray small fields after a great part of the load has been applied.

In AAV design hopper is located just behind the engine. Since the fuselage furnishes only the engine and the hopper and a small room for avionic equipments, the center of gravity is not expected to vary gradually as spraying progresses. This is good from stability point of view.

4.3 Taxiing

Taxiing over loose stony surfaces must be avoided. Flying stones may cause damage to the propeller. Turns on the ground should be made slowly. Turn radius should be large and the r.p.m. should be the lowest possible. Taxiing should be done over a route which is well known and at a speed adapted to terrain roughness.

4.4 Turns

Turns will be executed after the aircraft has pulled away from the ground. This way there will be more room for maneuvering. The airspeed should not drop too much during pull-up maneuver. Because the lift demanded from the wings and also the stalling speed will be increased in the following turn, in order to counteract the centrifugal force.

The coordinated turn will always enable the airplane to have its maximum performance. In a coordinated turn, the lift force is inclined from the vertical towards the center of the turn.

As the bank is increased, the total lift produced by the wings should be increased to balance the weight of the aircraft. The important characteristic of turning flight is that the stalling speed increases in a turn as the square root of the load factor. The important point is that an aircraft in a turning flight at low speed can tolerate very small bank angle before stall occurs.

There are three ways of to perform a turn. The coordinated turn is the best. In this flight condition the rudder and aileron are so coordinated as to keep slip indicator in its central position. The skidding turn results from too much rudder into the turn and/ or too much counter aileron during the steady turn. The slip indicator is deflected outside turn (toward the high wing). In this case the low wing will stall first because of the position of the aileron. And the airplane will spin under. A slipping turn results from too much aileron and/or too much top rudder. The slip indicator is deflected inside turn (towards the low wing). The high wing will stall first causing spin over the top.

The AAV will be automatically and autonomously piloted. Thus, in the programming phase of the guidance computer the above warnings shall be taken into account. It is quite straightforward to include a coordinated turn function to the autopilot computer. Thus, AAV will always fly with turn coordination, and proper precautions shall be taken in the algorithm to avoid stall during a coordinated turn. Note that to achieve full autonomy; the AAV autopilot will also include an auto throttle function as well.

4.5 Acceleration

It is undesirable to pull more g-force than necessary in the end-of-swath turn. A higher rate will help the aircraft to come to the next run a few seconds earlier. But its penalty is increased fatigue. The effect of fatigue produced by the g-forces is recognized in military aviation especially in low-level operations. So the wider turns with lower turn rates should be applied in agricultural applications.

The flight of AAV will normally be optimized to reduce excessive loads, to reduce fuel consumption, and to realize a more uniform spraying.

4.6 Wind Direction and Force

The wind speed changes with altitude. The effect of wind gradient is perceivable at altitudes below 50ft. In the case of a turn at very low height from the ground, the wind gradient will affect this flight. As it is shown when flying into the wind the aircraft will deviate from altitude in other words it will be unstable with regard to flying altitude whereas when flying horizontally with the wind aircraft will maintain altitude.

The above difficulties may be eliminated for an AAV with a properly planned flight course. The autopilot will normally alleviate instability problems during such a flight as well.

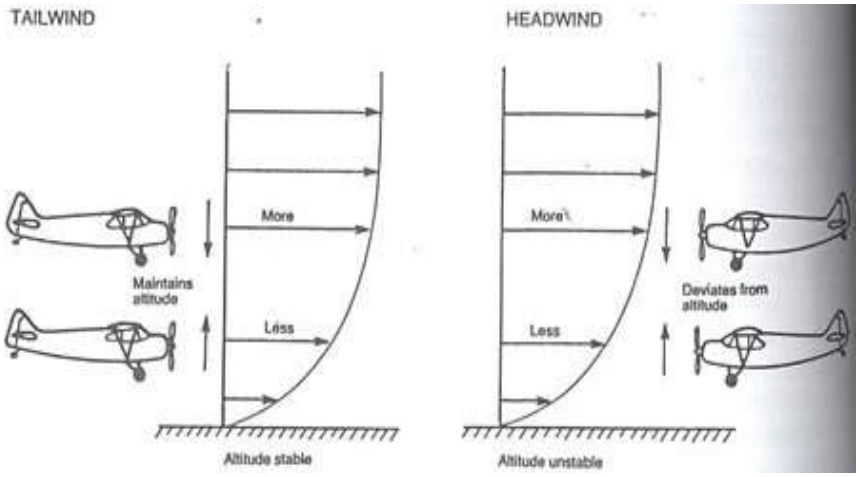

Fig 1.4 Level flight in a wind with a gradient

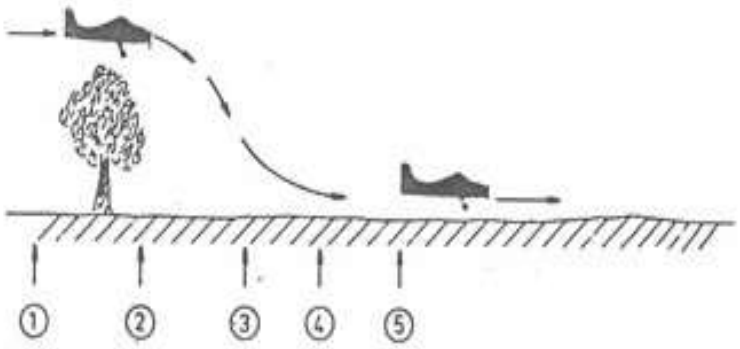

Fig 1.5 Descending over an obstacle

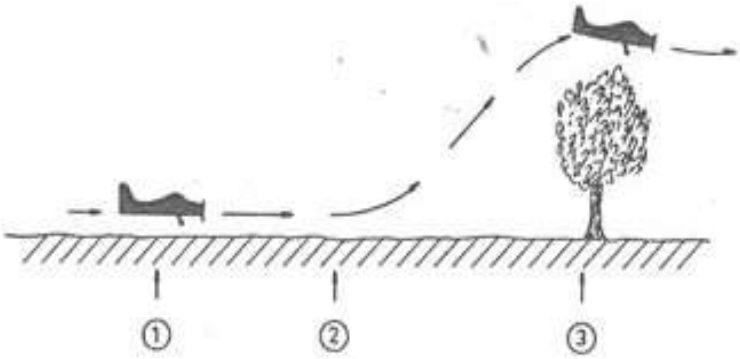

Fig 1.6 Climbing over an obstacle

V CONCLUSION

The required optimization procedures that have to be followed are mentioned in the future scope section of this project. Some of the results which give a brief idea about the proposed design are given below.The total weight of the aircraft for the given simple mission profile is 175 Kgs. The total amount of fuel required for completing the given mission profile is 30.95 liters, the engine utilized for the aircraft is 45 hp two stroke diesel engine. The required amount of distance required to take- off is 735 fts and landing distance is 409 fts. The typical mission profile assumed for this design is AUAV has to travel to the field which is at a 10 km distance from the base and has to spray the pesticides over roughly 18 acre field in the time span of 20 minutes. (Note that these parameters are assumed as rule of thumb rough approximations, actual time span of spraying will be dependent upon the field specifications as presented in agricultural sizing section.) Actual payload location is shown in the following diagram.

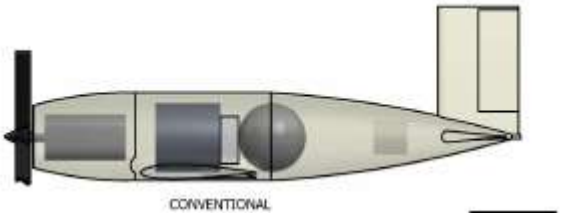

Fig 1.7. Payload location

The actual model is represented in diagrammatic form using modeling software such as CATIA (the model is scaled and rough representation of intended model) Please, note that lifting surfaces are not tapered in the model.

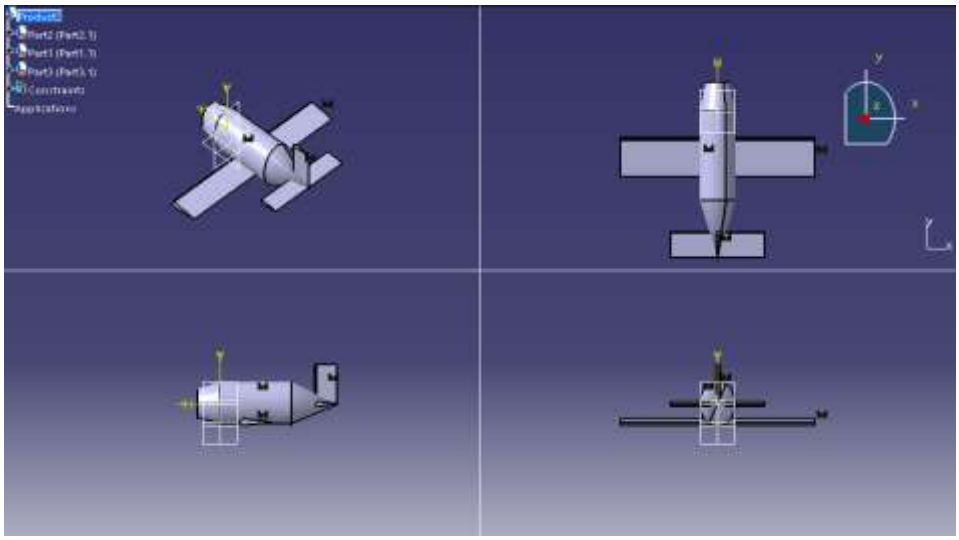

Fig 1.8 Three view representation of model

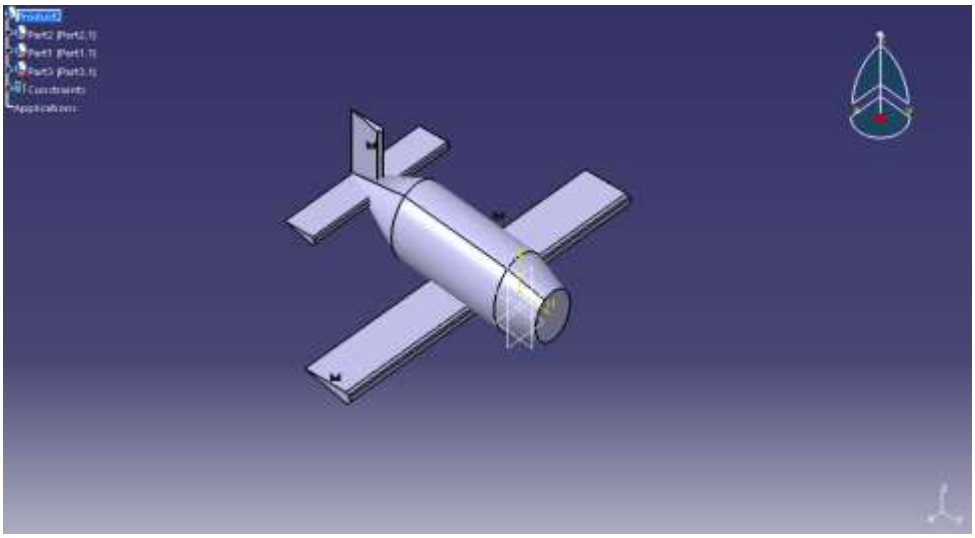

Fig 1.9 . Isometric view of Model

Acknowledgement

- The main work of this project was supported by our Asst.Professor **S.Ravikanth ., B.E**

REFERENCES:

[1] http://www.agaviation.org/content/industry-faqs

[2] http://books.google.co.in/books?id=uFk4t0MbfbcC&pg=PA9&lpg=PA9&dq=benefits+of+agricultural+aircrafts+over+conventional+agriculture&source=bl&ots=vkswyTQJGS&sig=7nFdSAXMolEMbO4zI7MkKDwSwXw&hl=en&sa=X&ei=9SHFUpW_HuqViAeHooDQDA&ved=0CC4Q6AEwAQ#v=onepage&q=benefits%20of%20agricultural%20aircrafts%20over%20conventional%20agriculture&f=false

[3] http://en.wikipedia.org/wiki/Agricultural_aircraft

[4] https://www.google.co.in/webhp?sourceid=chromeinstant&rlz=1C1CHHZ_enIN515IN515&ie=UTF-8&rct=j#q=benefits+of+agricultural+aircrafts+over+conventional+agriculture

ABSORPTION AND PL STUDY OF CHEMICALLY DOPED (CD-ZN)S:CDCL2 DEPOSITED BY CBD METHOD

R Shrivastava[1] , S C Shrivastava[2]

[1] *Department of Physics, Shri Shankaracharya Engineering College, Bhilai, C.G., (India)*

[2] *Department of Mathematics, Rungta College of Engineering & Technology. Bhilai, Chhattisgarh, (India)*

ABSTRACT

Thin films of (Cd-Zn)S:$CdCl_2$ were deposited on glass substrates at 60^0C for 60 minutes by Chemically Bath Deposition Method. The absorption coefficient (α) was determined from the absorption and transmission using (uv-vis spectrophotometer) at a normal incident of light in the wavelength of range (400-800)nm. Using the relationship $(\alpha h\nu)^2$ against hυ, we find that the films have energy gap between (2.9ev-3.1ev) and ($\alpha \geq 10^4$ cm^{-1}) means the direct type of transmission, also we calculate (Refractive index , Extinction coefficient). The values obtained by this method are suitable for many scientific studies and technological applications, such as gas sensors, heat mirrors, transparent electrodes, solar cells and piezoelectric devices. PL emission spectra for CdZnS:$CdCl_2$ thin film also studied in present paper.

Key Words: Thin Film, Chemical Bath Deposition, Optical Properties.

I. INTRODUCTION

There has been great interest of researchers in electro-optical properties of ZnS/CdS thin films prepared by CBD technique [1] because this technique is regarded as one of the simplest and most economical techniques for producing good quality nano-crystalline films [2]. Indeed this technique is very attractive because of being capable of depositing optically smooth, uniform and homogenous layers. Although a number of research papers have been published exhibiting electro-optical properties of CdS in different forms like powder, crystals, pellets, nanocrystallites and thin films [3], the information available on ternary $Cd_{1-x}Zn_xS$ system is very limited. It is well established that $Cd_{1-x}Zn_xS$ films possess properties between those of CdS and ZnS [4, 5]. Since their addition produces a common lattice in which band structure has a larger band gap than CdS, it makes the material more attractive for fabricating EL devices. Thin film studies of CdS and ZnS type materials are very important because of their wide technological applications e.g. ACTFEL panels, flat TV screen, sensitive photoconductor [6], IR detector [7], solar cell [8], light emitting devices [9] etc. These TFEL displays have found strong acceptance in medical and industrial control applications, where the need for wide view angle, longer life, wide temperature ranges and fast response time are critical. $Cd_{1-x}Zn_xS$ films have been prepared in different forms like powders, crystals, pellets, nanocrystallites and thin films. Earlier workers used many sophisticated techniques like molecular beam epitaxy [10], plasma chemical sputtering [11], metal organic chemical vapour deposition (MOCVD) [12] and metal organic vapor-phase epitaxy (MOVPE) [13] to produce

thin films with adequate properties like high crystalline, low resistive and high transmittance. However, chemical deposition technique appears as an interesting technique for preparing ZnS/CdS thin films [1].

II. EXPERIMENTAL DETAILS

The samples were prepared by vertically dipping the cleaned substrates of conducting glass plates of dimension 24 mm x 75 mm (with high transmission coefficient). The substrates were first washed with acetone, HCl, distilled water and by using ultrasonic cleaner. Such cleaned glass slides were dipped into a mixture of appropriate amounts of 1 M solutions of zinc acetate / cadmium acetate, thiourea and 30 % aqueous ammonia (All analytical reagent grade-99.9 % pure; mixture showed pH~11). In addition appropriate amounts of 0.01 M solution of $CdCl_2$ were also mixed in the original mixture. Zn $(CH_3COOH)_2$ and Cd $(CH_3COOH)_2$ provided Zn and Cd respectively whereas Thiourea $(NH_2)_2CS$ gave Sulphur for $Cd_xZn_{1-x}S$ films. The solutions of the compounds used were prepared in double distilled water and films were prepared at a constant temperature of 70^0 C in a water bath. Films were prepared on around 60 % area of the glass slide. The deposition of films is based on precipitation followed by condensation. In the beginning when precipitation started, stirring was done. After that, depositions were made in the static condition and after deposition; films were washed with distilled water and then dried by keeping in open atmosphere under sun light until its moisture content reduces completely. Here subscripts to Zn and Cd represent the percentage composition in the solution and not the final compositions. In all the samples discussed here, the volumes of $CdCl_2$ and TEA used as activator and flux respectively were 2 ml each.

III. RESULTS AND DISCUSSIONS

3.1 Optical Measurements

The optical absorption spectra of (Cd-Zn)S:$CdCl_2$ thin films at room temperature were recorded by UV-Vis Spectrophotometer in the wavelength range 800nm-1000nm. The transmission of (Cd-Zn)S:$CdCl_2$ thin film is influenced by varying concentration of Zn. It is noticed that the (Cd-Zn)S:CdCl2 thin film has higher transmission value in the visible range of the spectrum. The absorption edge is determined by the optical absorption method, which is simple and provides for the explanation of some features concerning the band structure of the films. Aabsorption coefficient is a ratio decreases in flux energy incident on the unit distance in dimensions diffusion wave in the media and absorption coefficient dependent on photon energy and prepared , the photo energy represent by relationship :

$E=h\nu$ ----------(1)

hv= absorption photon Energy And the absorption coefficient

$\alpha = 2.303\ A/t$ ----------(2)

t= thickness of thin film , A= absorption .

The electrons transformation from valance band to conduction band vertically and without happening any change in value.

$\Delta k = 0$

The Absorption equation to the transition can be write in the form.

$\alpha h\nu=A(h\nu-E_g)^r$ ---------- (3)

where Eg= optical energy gap , A= constant dependent on the (valance and conduction bands).

r=1/2 for allowed directed transition. The extinction coefficient (K) is:

$k = \frac{\alpha\lambda}{4\pi}$----------(4)

On the other hand, the real and imaginary parts of dielectric constant of the films can also be estimated if the refractive index and extinction coefficient are known. The real and imaginary part of the dielectric constant can be expressed by the following relation:

$\varepsilon_1 = n^2 - k^2$

and

$\varepsilon_2 = 2nk$

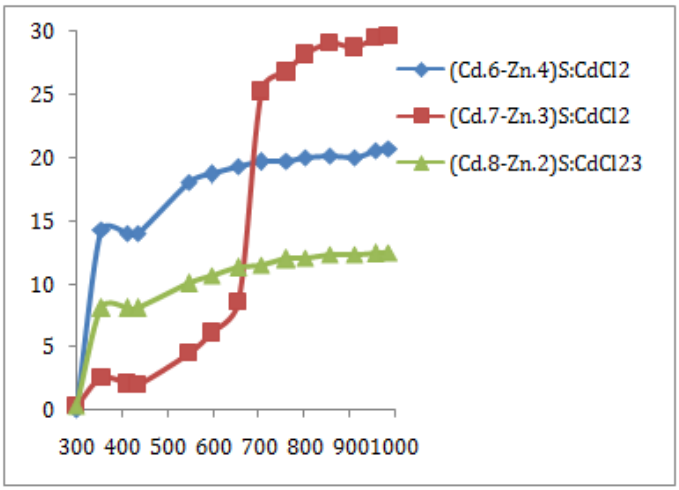

Fig 1 Optical Transmission Spectra Of (Cd-Zn)S:Cdcl2 Thin Film

The curves of $\ln(\alpha h\nu)$ versus $ln(h\nu - E_g)$ were plotted using the E_g values to determine the value of r and it was found about ½ from the slope of these curve. Therefore (Cd-Zn)S:$CdCl_2$ thin films appear to be a material which has a direct band gap. The variation of $(\alpha h\nu)^2$ with $h\nu$ for (Cd-Zn)S:$CdCl_2$ thin film is shown in fig. 2. It has been observed that the plots of $(\alpha h\nu)^2$ vs. $h\nu$ are linear over a wide range of photon energies which are indicating the direct type of transitions. The intercepts (extrapolation) of these plots (straight lines) on the energy axis give the energy band gaps. The direct band gaps for all the films were determined. With increasing Zn content the energy band gap of (Cd-Zn)S:$CdCl_2$ thin film increases.

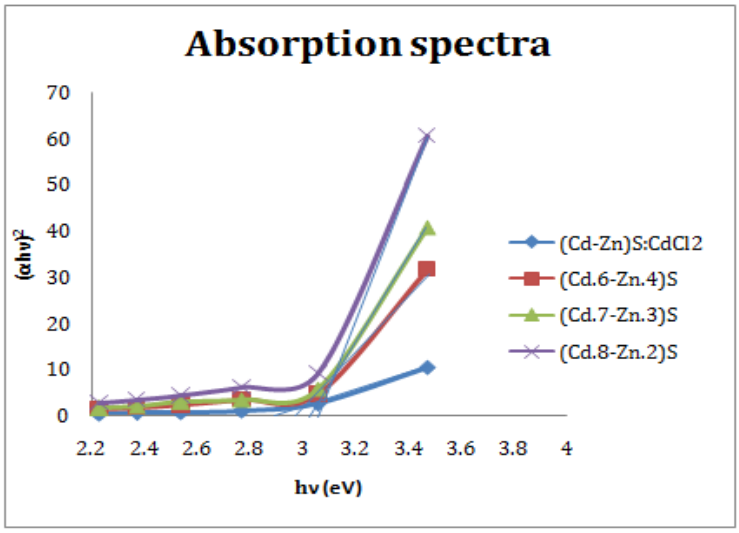

Fig. Plots Of $(\alpha h\nu)^2$ Vs. Hυ Of The $(Cd_{1-X}zn_x)S:Cdcl_2$ Thin Film

The calculated values of refractive index n and extinction coefficient k were plotted as a function of wavelength, as shown in the fig. 3. We also calculated the real and imaginary part of the dielectric constant as it is directly related to the density of states within the energy gap of the films.

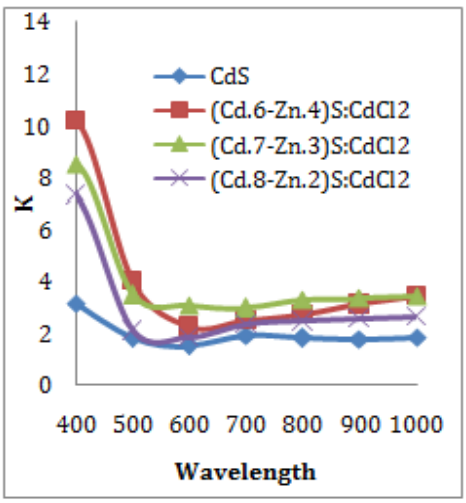

Fig.(a) Variation of Extinction coefficient k with wavelength

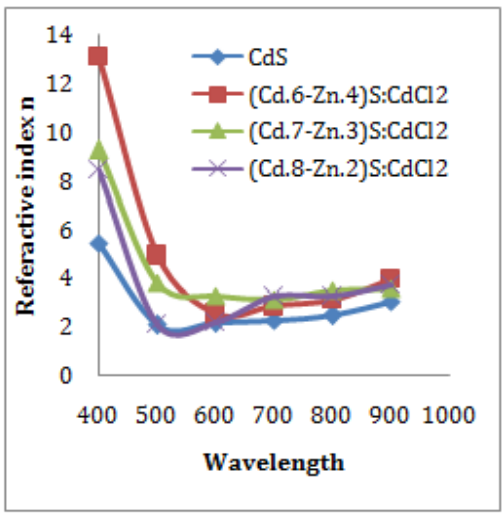

Fig.(a) Variation of Referactive Index n with wavelength

T A B L E: Direct Energy Band Gaps For The (Cd-Zn)S:Cdcl2 Thin Films

Material	E_g
CdS	2.85
$(Cd_{.6}-Zn_{.4})S:CdCl_2$	2.92
$(Cd_{.7}-Zn_{.3})S:CdCl_2$	3.0
$(Cd_{.8}-Zn_{.2})S:CdCl_2$	3.09

3.2 PL Emission Spectra

The chemically deposited $(Cd-Zn)S:CdCl_2$ thin films were uniform and consisted of small nanocrystalline grains. The preparation of CdZnS thin films by CBD is governed by the chemical reaction within the solution of

reactants. It was reported that at lower temperatures the surface of the CdZnS thin films is rough, but as the temperature

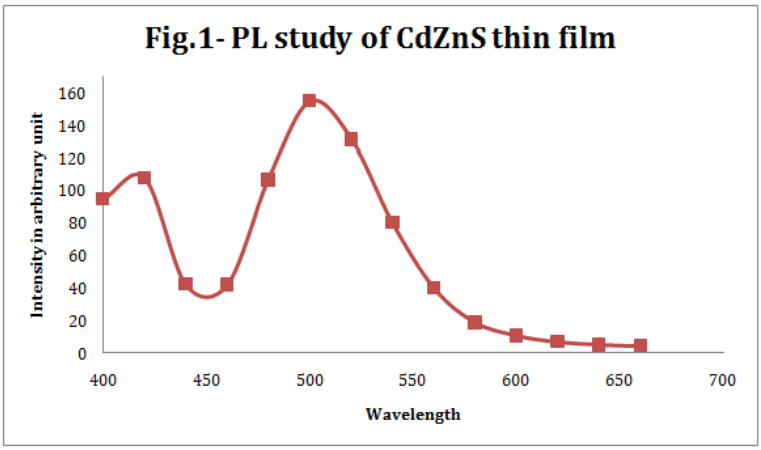

remains constant (at 60°C), the film surface becomes more uniform [13]. In the present paper (Cd-Zn)S:$CdCl_2$ films have prepared at different time duration and found that maximum PL emission intensity occurs at 1 hours. The photoluminescence (PL) emission spectra of the different (Cd-Zn)S:CdCl2 films under the excitation energy of 365 nm wavelength have studied. The effect of time on PL emission intensity has shown in fig.-1. The maximum PL emission intensity occurs at 520nm.

IV. CONCLUSION

(Cd_{1-x}-Zn_x)S:$CdCl_2$ (x=0, x=.2, x=.3, x-.4) thin films have been deposited by CBD method on glass substrate at 60^0C. Based on the optical investigation of the films, the following results were obtained. The maximum transmission value is obtained for ($Cd._7$-$Zn._3$)S:$CdCl_2$ film. The optical constants such as refractive index (n), extinction constant (k) of the films, were calculated for the films. All these constants decrease with wavelength. The optical absorption spectra under study shows that the absorption spectra mechanism is due to direct transition. The optical dispersion (Eo and Ed) using Wemple-DiDomenico model were also analyzed.

REFERENCES

[1] L. Zhou, Y. Xue, J. Li, Journal of Environmental Sciences **21**(1)**,** S76 (2009).
[2] J. Cheng, D. Fan, H. Wang, B. Liu, Y. C. Zhang, H. Yan, Semicond. Sci. Technol. **1h8,** 676 (2003).
[3] A. E. Raevskaya, A. L. Stroyuk, S. Y. Kuchmiy, V. M Dzhagan, M. Y. Valakh, D. R. T. Zahn, J. Phys.: Condens. Matter **19,** 386237 (2007).
[4] A. Banerjee, P. Nath, V. D. Vankar, K. L. Chopra, Physica Status Solidi **46**(2), 723 (2006).
[5] R. Xie, U. Kolb, J. Li, T. Basché, A. Mews, J. Am. Chem. Soc. **127**(20), 7480 (2005).
[6] S. Bhushan, S. Pillai, Radiation Effects and Defects in Solids **163(3)**, 241 (2008).
[7] M. Gunasekaran, P. Ramaswamy, M. Ichimura, J. Electrochem. Soc. **153**(7), G 664 (2006).
[8] I. O. Oladeji, L. Chow, Thin Solid Films **474,** 77 (2005).
[9] S. Fujji, N. Tasaki, N. Shinomura, S. Kurai, Y. Yamada and T. Taguchi; J. Light, Vis. Env. **31**(2), 61(2007).
[10] H. K. Min, L. Sung-Nam, P. Nae-Man, P. Seong-Ju, Jpn. J. Appl. Phys. **39,** 6170 (2000).
[11] S. Maraki, H. Nakanishi, M. Sugiyama, S. Chichibu, Physica Status Solidi (c) **5** (9), 3135 (2008).
[12] O. Akinwummi, M. A. Elereja, J. O. Olowalafe, G. A. Adgboyega, E. O. B. Ajayi, Optical Materials **13** (2), 255 (1999).
[13] O. S. Kumar, E. Watana, R. Nakai, N. Nishimoto, Y. Fujita, Jouranl of Crystal Growth **298**, 491 (2007).

ESTIMATIONOF SOLAR RADATION USING ARTIFICAL NEURAL NETWORK

Sanjay Kumar[1], Tarlochan Kaur[2], Manoj Arora[3]

[1,2]Electrical Engineering Department, PEC Chandigarh, (India)

[3]Civil Engineering Department, PEC Chandigarh, (India)

ABSTRACT

The objective of this paper is to review Artificial Neural Network (ANN) techniques for solar radiation estimation and identify a suitable technique for estimation of solar radiation using Artificial Neural Network (ANN) tool. Different climatic conditions are used for training and testing the ANN solar radiation data of Hamirpur city (Himachal Pradesh). The developed ANN model has two layers feed forward neural network trained with Levenberg Marquand back propagation (LM) algorithm and is appropriate for complex problems. The developed model can be used to predict solar radiation another location. The result obtained from this model show good prediction accuracy.

Keywords: Artificial Neural Network, Back Propagation, Solar Radiation.

I. INTRODUCTION

Solar energy is one of the most important and promising renewable and sustainable energy. The planning and designing of solar energy system for a particular location require accurate knowledge of the solar radiation data. Estimation of the solar radiations has wide range of applications like solar heating, cooking, agriculture engineering, architecture engineering, power plant erection etc. In developing countries like India, only a few meteorological stations are available to monitor of solar radiation. Moreover the cost of the measuring equipment of solar radiations is very high. This problem leads to researchers to develop new methods to find solar radiations in terms of more easily available meteorological data. For solar potential assessment, some models are proposed by various researchers such as mathematical, empirical and statistical model and Artificial Neural Network (ANN) model. ANN methods are widely used over conventional techniques because ANN deals with complex and nonlinear problem more easily and used for prediction of global solar radiation using different meteorological and geographical variables. Data collection for solar radiation is essential both climatically as well as geographically point of view, from different metrological station nearby to location.

II. LITERATURE FOR SOLAR RADIATION

For resource assessment, the conventional methods, empiric, analytic, mathematical simulation have been used for estimation and modeling of the meteorological data are used.

Bulut [1], developed a model to estimate the daily global solar radiation for Istanbul using long term measured data with a sine wave equation.

Later on, Bulut and Buyukalaca [2], tested the model for 68, locations in Turkey and the results showed that the predictions from the model agree well with the long-term measured data.

Huashan Li [3], compared some models using only the sunshine duration for estimating the global solar radiation on a horizontal surface in Tibet and developed general models for use in locations where the solar radiation data are not available or missing. An algorithm Meta-Heuristic Harmony Search Algorithm has been developed for determining the Angstrom equation coefficients, by using the daily solar radiation and daily sunshine duration.

Angstorm correlation is modified by new set of coefficient to estimate global radiation. Least squares regression analysis performed by taking longitude and latitude at Lucknow (India) [4].

Sozen et al. [5], developed ANN model for estimation of solar radiation in Turkey using meteorological and geographical data as input variables. The learning algorithm for network is scaled conjugate gradient, Pola-Ribiere conjugate gradient, Levenberg Marquardt and a logistic sigmoid transfer function. The MAPE Value for the MLP network is found to be 6.73%.

Mohandes et al. [6], used ANN for modeling of global solar radiation in Saudi Arabia.

Ouammi et al. [7], developed ANN model for estimating monthly solar irradiation of 41 Moroccansites. The predicted solar irradiation varies from 5030 to 6230 Wh/m2/day.

Hontoria et al. [8], proposed MLP model to develop solar radiation map for Spain with different climatic conditions. The MLP model utilizes days, hour order number, daily clearness index and hourly clearness index as inputs for prediction. This methodology is better than classical methods and can be used for developing a solar map.

Alam et al. [9], developed ANN model for estimating beam solar radiation by reference clearness index (RCI).

Senkal and Kuleli [10], used ANN and physical model to estimate solar radiation for 12 cities in Turkey. The input values to the network are latitude, longitude, altitude, mean diffuse radiation and mean beam radiation. The data of 9 cities are used to train a neural network and 3 cities to test the network. The RMSE values using the MLP and the physical model are 54 W/m2 and 64 W/m2 (training cities); 91W/m2 and 125 W/m2 (testing cities), respectively. Yadav et al. [11], identified a suitable variables for accurate solar radiation prediction using ,Waikato Environment for Knowledge Analysis (WEKA) software and applied to 26 Indian locations having different climatic conditions to find most influencing input parameters for solar radiation prediction in ANN models.

Hasni et al. [12], modeled global solar radiation using air temperature, relative humidity as inputs in south-western region of Algeria. The training is done using LM feed-forward back Propagation algorithm and transfer function in hidden, output layers is hyperbolic tangent sigmoid, purelin respectively. The MAPE, R2 are 2.9971%, 99.99%.

Elminir et al. [13], estimated hourly and daily values of the diffuse fraction (KD) using ANN in Egypt.

III. MODELING OF SOLAR RADIATION

Artificial neural network model is developed for solar radiations prediction. The data for the district Hamirpur having longitude 76.52° and latitude 31.68°,Himachal Pradesh (India) are taken from are taken from National Aeronautics and Space Administration (NASA) [14].

To predict the potential of solar radiations accurately, an ANN based model has been generated using the climatic data as it is not possible to install solar radiation measuring instruments at every location.

The various input parameters for the ANN model are as: air temperature, relative humidity, atmospheric pressure, wind speed, earth temperature, longitude and latitude and output are solar radiations for every month of the years.

In this paper, the developed ANN model has two layers feed forward neural network trained with Levenberg Marquardt back propagation (LM) algorithm and is appropriate for complex problems. In the paper 70% data are used for training, 15% for testing and 15% for validations.

IV. RESULT

The regression plot shows the prediction accuracy of the solar radiations shown in fig 1.

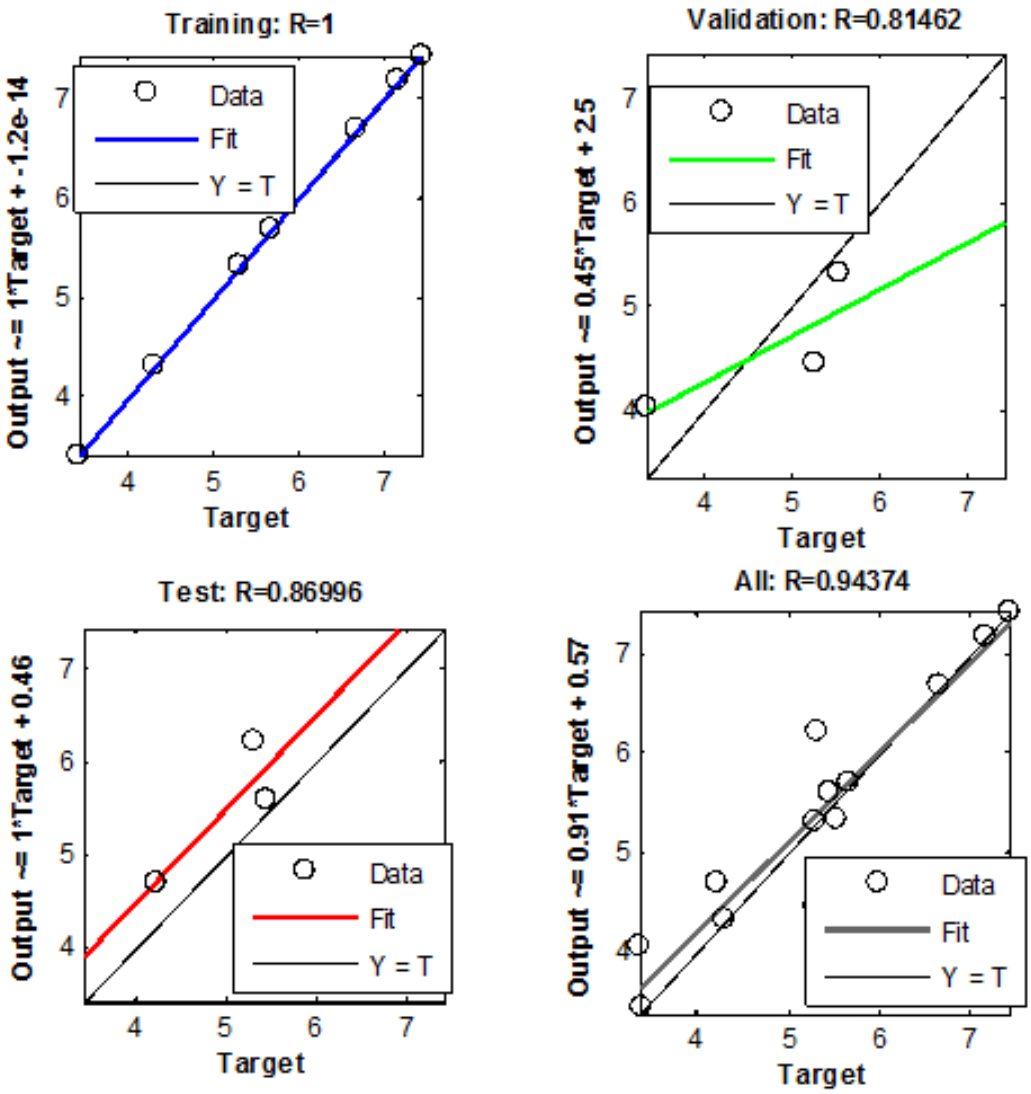

Fig. 1. Regression Plots For Actual And Predicted Results By Feed-Forward Neural Network Model For Training, Validation, Testing Samples And All Data Set.

Figure 1 shows the relationship between the perfect fit line, outputs and targets. The circles are the data points and colored line represents the best fit between outputs
and targets. In the figure 1, circles are across the dashed line, so our outputs are not far from targets.

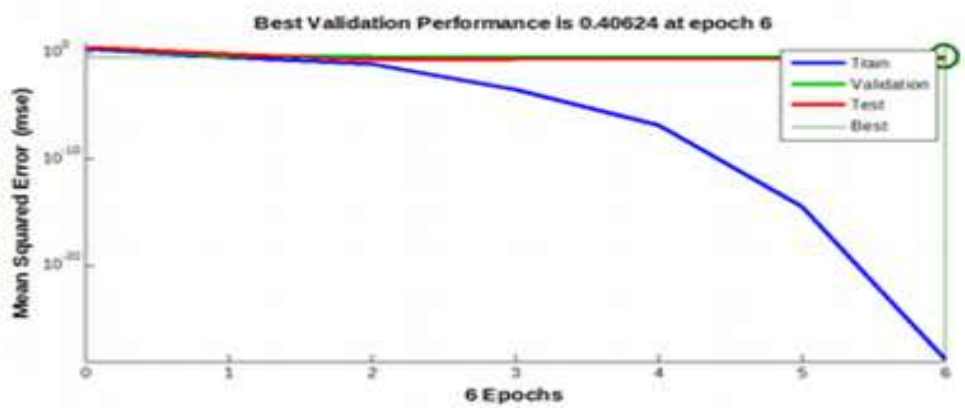

Fig. 2 Plot for Training, Validation and Testing Mean Square Errors

The performance plot of model present mean square error becomes minimum as the value of epochs is increasing. The test and validation set error has comparable characteristics and no overlapping fitting has occurred near epoch 6. The training stops when mean square error (MSE) reaches its minimum value.

Table 1 Error analysis of ANN

Samples	MSE	R
Training	1.27344e-29	9.99999e-1
Validation	4.06238e-1	8.14617e-1
Testing	3.40771e-1	8.69964e-1

V. CONCLUSION

ANN modeling techniques can be used for solar radiation prediction. The model indicates lower MSE which means good prediction accuracy. The model developed in this study include parameters like latitude, longitude, air temperature, relative humidity, atmospheric pressure, wind speed, earth temperature. ANN model is suitable for predicting solar radiation for t locations where solar radiations measuring instrument are not installed. ANN models e for solar energy planning and solar power generation. Further studies to estimate solar radiations for large specific areas can be undertaken.

REFERENCES

[1] H. Bulut, Generation of typical solar radiation data for Istanbul, Turkey, Energy Renewable, 45(4), 2004, 268-273.

[2] H. Bulut, O. Büyükalaca, Simple model for the generation of daily global solar radiation data in Turkey, Applied Energy, 84(5), 2007, 477- 49.

[3] Li. Huashan, M. Weibin, Li. Yongwang , W. Xianlong, Z. Liang, Global solar radiation estimation with sunshine duration in Tibet, Renewable energy, 36(11), 2011, 3141-3145.

[4] O. P. Singh, S.K. Srivastva, Empirical relationship to estimate global radiation from hours of sunshine, Energy Convers. Mgnt.,37(4), 1996,501-504.

[5] A. Sozen, E. Arcaklioğlu, M. Özalp, E.G. Kanit, Use of artificial neural networks for mapping of solar potential in Turkey, Applied Energy, 77(3), 2004, 273-286.

[6] M. Mohandes, S. Rehman, H. Alawani, To Estimation of Global Solar Radiation Using Artificial Neural Networks, Renewable Energy, 14(1–4), 1998, 179-184.

[7] A .Ouammi, D. Zejli, H. Dagdougui, R. Benchrifa, Artificial neural network analysis of Moroccan solar potential, Renewable and Sustainable Energy Reviews, 16(7), 2012, 4876-4889.

[8] L. Hontoria, J. Aguilera, P. Zufiria, An application of the multilayer perceptron: solar radiation maps in spain," Solar Energy, 79 (5), 2005, 523–530.

[9] S. Alam, S. C. Kaushik, S. N. Garg, Computation of beam solar radiation at normal incidence using artificial neural network," Renewable Energy, 31(10),2006, 1483-1491.

[10] O. Senkal, T. Kuleli, Estimation of solar radiation over Turkey using artificial neural network and satellite data, Applied Energy, 86 (7-8), 2009, 1222-1228.

[11] M. Benghanem, A. Mellit, S.N. Alamri, ANN-based modeling and estimation of daily global solar radiation data: a case study, Energy Consv. And Mang., 50(7), 2009, 1644-1655.

[12] D. A. Fadare, Modeling of solar energy potential in Nigeria using an artificial neural network model, Applied Energy, 86 (9), 2009, 1410-1422.

[13] A. K. Yadav, H. Malik, S. S. Chandel, Selection of most relevant input parameters using WEKA for artificial neural network based solar radiation prediction models, Renewable and Sustainable Energy Reviews, vol. 31, 2014, 509–519.

[14] A. Hasni, A. Draoui, A. Bassou, B. Amieur, Estimating global solar radiation using artificial neural network and climate data in the south western region of Algeria, Energy Procedia, 18, 2012, 531-537.

[15] H.K. Elminir, Y.A. Azzam, F.I. Younes, Prediction of hourly and daily diffuse fraction using neural network, as compared to linear regression models, Energy , 32(8),2007, 1513-1523.

[16] https://eosweb.larc.nasa.gov/sse/RETScreen/.

A COMPARITIVE ANALYSIS OF MULTIPLIERS USING GDI TECHNIQUE

Duraisingh Ruth Anita Shirley[1], Shanmuga Priya.K[2], Nagalingam Rajeswaran[3]

[1]PG students / VLSI Design, SNS College of Technology, Coimbatore, (India)

[2,3] Dept.of ECE, SNS College of Technology, Coimbatore,(India)

ABSTRACT

A bountiful of adders has been designed over the years in order to simplify the multiplication with various improvements. A comparison of Complementary Pass Transistor Logic and Shannon Adder and Gate-Diffusion Input has been performed to determine the latter adder as the optimised one in terms of power consumption and area. This adder is then implemented in three types of multiplies: Array multiplier, Wallace-tree multiplier and Modified Baugh-Wooley multiplier. The modified Baugh-Wooley multiplier is more advantages than the other two multipliers due to reduction in latency caused while passing the partial products from one adder to the other. A comparison table of the power consumed by the three multipliers is draw and it is found that the Baugh-Wooley multiplier utilizes less amount of power than the rest. This paper presents the power consumption comparisons and delay of various designs of multipliers.

I INTRODUCTION

A binary multiplier is an electronic circuit used in digital electronics, such as a computer, to multiply two binary numbers. It is built using binary adders. A variety of computer arithmetic techniques can be used to implement a digital multiplier. Most techniques involve computing a set of partial products, and then summing the partial products together. This process is similar to the method taught to primary schoolchildren for conducting long multiplication on base-10 integers, but has been modified here for application to a base-2 (binary) numeral system. A multiplier is one of the key hardware blocks in most digital signal processing (DSP) systems. Typical DSP applications where a multiplier plays an important role include digital filtering, digital communications and spectral analysis (Ayman.A et al (2001)). Many current DSP applications are targeted at portable, battery-operated systems, so that power dissipation becomes one of the primary design constraints. Since multipliers are rather complex circuits and must typically operate at a high system clock rate, reducing the delay of a multiplier is an essential part of satisfying the overall design

II. LITERATURE REVIEW OF DIFFERENT MULTIPLIER CIRCUITS

2.1. Complementary Pass Transistor Logiic (CPL) Adder

The Complementary pass-transistor logic (CPL) full adder having 32 transistors and using the CPL gates has been designed. The complexity of full CMOS pas gate logic can be reduced dramatically by adopting another circuit called CPL. The main idea behind CPL is to use a purely NMOS pas transistor network for the logic operations. Al the inputs are applied in complementary form. i.e.: every input signal and its inverse must be provided. The circuit also produces complimentary output, to be used by subsequent CPL.

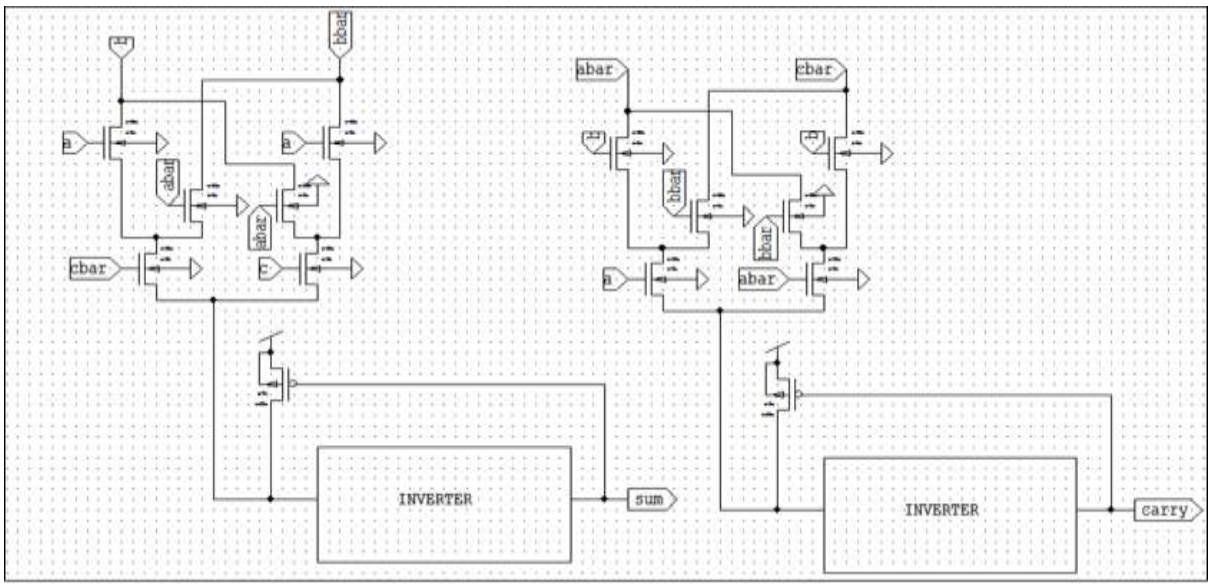

Fig. 1 CPL Adder

The CPL has certain drawbacks due top source follower action, body effect, limited fan-out capability, high leakage power when not cross coupled. Duality principle enables logic function such as AND-OR, NAND-NOR, XOR-XNOR. By just interchanging the inputs AND, OR basic logic gates, MUX circuits can be constructed.

2.2 Shannon Full Adder

The MCIT technique is developed by using Karnaugh map from the Boolean expressions for the sum and carry signals from the standard truth table for the full adder circuit. The Boolean expressions are given as:

$$C = AB + BC + CA \qquad \text{----(1)}$$

$$S = ABC + A'B'C + AB'C' + A'BC' \qquad \text{----(2)}$$

By using expressions (1) and (2), the pass transistor functions can be implemented. When the expression result =0, the pass transistor function is given by the complement of the input variable. If the expression result = 1, the pass transistor function is given by the input variable. To implement the pass transistor function for 'n' input variables, we use n-1 control input data and only one input data. The source input acts as an input of the signal.

The formulae for the ith stage are given as:

$$C_{i+1}=A_iB_i+(A_i \text{ xor } B_i)\, C_i$$

$$S_i=A_i \text{ xor } B_i \text{ xor } C_i$$

According to Shannon's theorem any logic expression is divided into two terms. One with a particular variable set to 1and multiplying it by a variable and then set the variable to 0 and multiplying it by the inverse. The fullest reduction can be obtained by continuously repeating the Shannon theorem. This method is useful especially to multiplier and pass transistor circuit design. The Shannon's theorem in a generalised way can be stated as a function of many variables, f (b0, b1, b2, y, bi, y, bn) can be written as the sum of two terms, say one with a particular variable ai , set to 0, and one with it set to 1.

f(b0, b1, b2, ..., bi,.....y, bn) = bi'f (b0, b1, b2, ..., 0,.....y, bn) +

bi f (b0, b1, b2, ..., 1,.....y, bn)

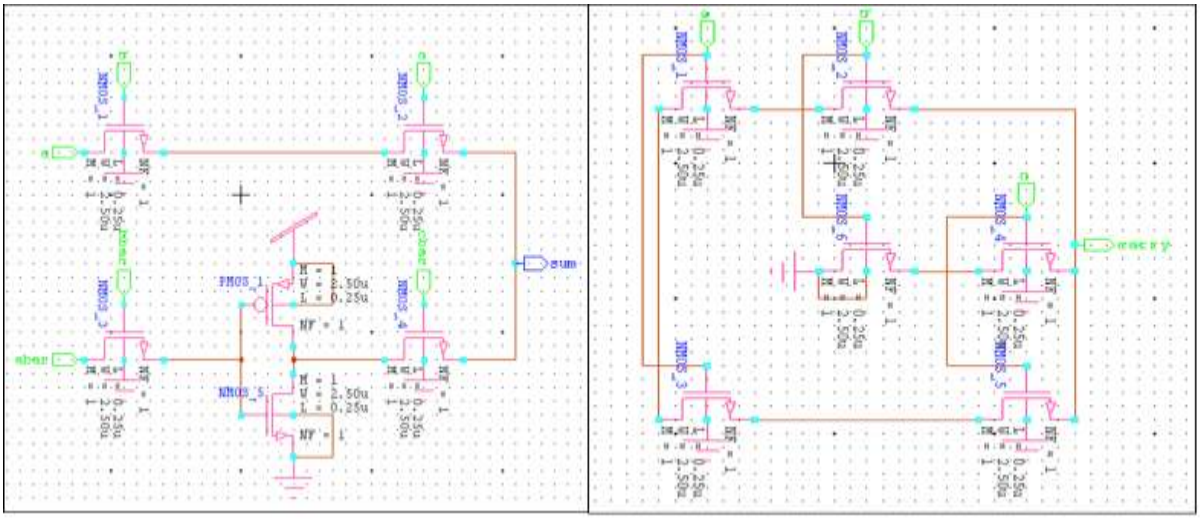

Fig. 2 Shannon Adder

Shannon's theorem is applied to the logical function using n-1 variables as control inputs and three data lines set to a logical '1'. These source inputs are then connected to the VDD lines (logical '0'), which are connected to the ground. The remaining nth variable is connected from the data input to the source input. The data signals flow

horizontally and the control signals flows vertically. Remove pairs of transistors when they cancel each other. The Shannon expression output depends upon the pass logic '1' or logic '0'. If it has logic'0' then the connection input is given by 0 and by '1' for the connection input '1'.

2.3 Gate Diffusion Input

Gate diffusion input is a novel technique for low power digital circuit design in an embedded system. This technique allows reduction in power consumption, delay and area of the circuit. This technique can be used to reduce the number of transistors compared to conventional CMOS design. Recently, a novel design called Gate-Diffusion Input (GDI) is proposed by Morgenshtein et. al.. It is a genius design which is very flexible for digital circuits. Besides, it is also power efficient without huge amount of transistor count. Although GDI has the above advantages, it still has some difficulties that are needed to be solved. The major problem of a GDI cell is that it requires twin-well CMOS or silicon on insulator (SOI) process to realize. Thus, it will be more expensive to realize a GDI chip. However, if only standard p-well CMOS process can be used, the GDI scheme will face the problem of lacking driving capability which makes it difficult to realize a feasible chip. The basic GDI cell is shown in figure. It should be noted that the source of the PMOS in a GDI cell is not connected to VDD while the source of the NMOS in a GDI cell is not connected to GND. This feature gives the GDI cell two extra input pins to use which makes the GDI design more flexible than a usual CMOS design. However, this feature is also the major cause of its disadvantage: special CMOS process required. To be more specific, the GDI scheme requires twin-well CMOS or silicon on insulator (SOI) process to implement which is of course more expensive than the standard p-well CMOS process.

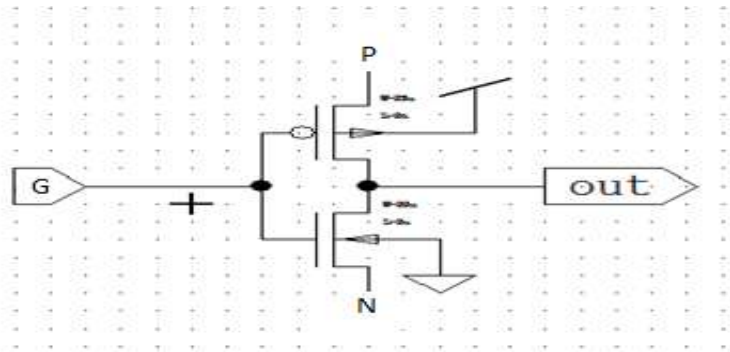

Fig. 3 Basic GDI Cell

GDI cell consists of three input terminals G, P and N. The various functions that can be implemented with basic GDI cell, which consists of only two transistors is as shown in below.

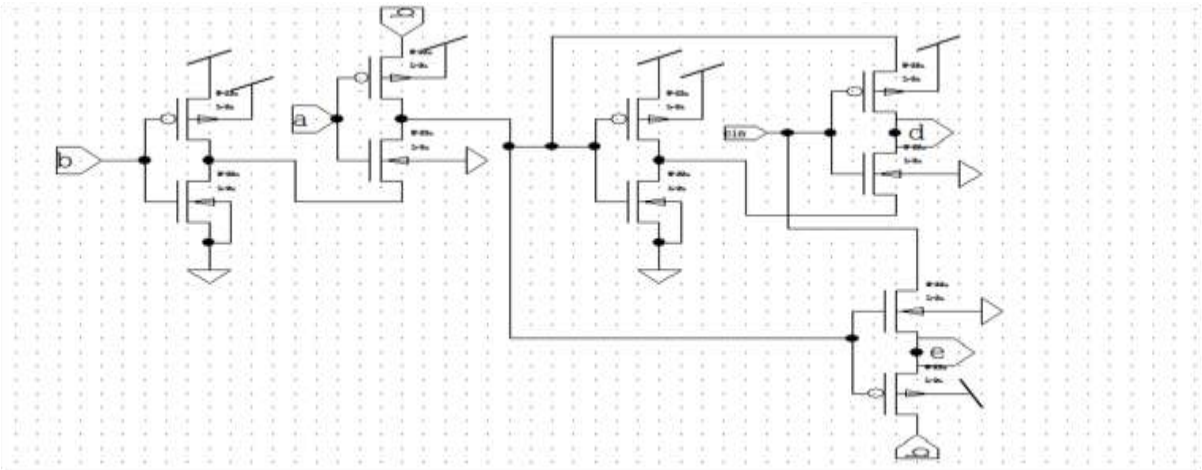

Fig. 4 GDI Full Adder

A full adder is implemented with the help of GDI technique. Here two multiplexers and an XOR gate operate together to form the full adder. It is observed that GDI adder is the optimum adder based on power consumed. Hence the multipliers are implemented with the GDI adder.

2.4 Array Multiplier

The array multiplier originates from the multiplication parallelogram. As shown in Fig.5, each stage of the parallel adders should receive some partial product inputs. The carry-out is propagated into the next row. The bold line is the critical path of the multiplier. In a non-pipelined array multiplier, all of the partial products are generated at the same time. It is observed that the critical path consists of two parts: vertical and horizontal. Both have the same delay in terms of full adder delays and gate delays. For an n-bit by n-bit array multiplier, the vertical and the horizontal delays are both the same as the delay of an n-bit full adder.

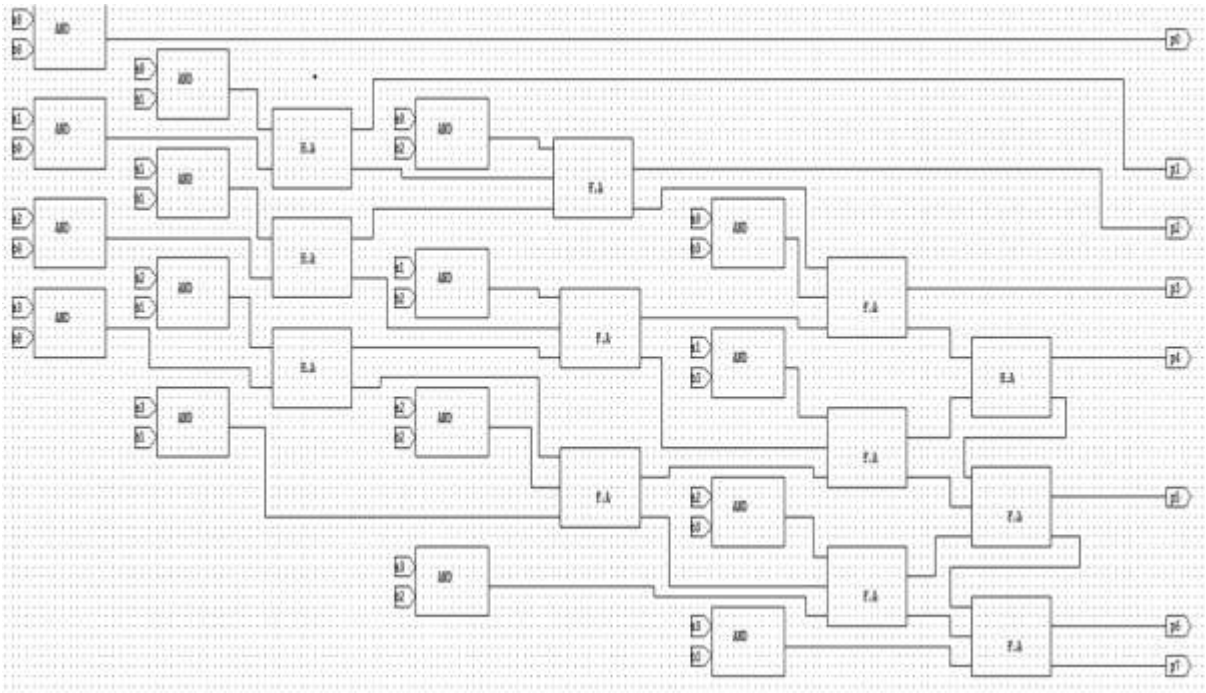

Fig. 5 Array Multiplier

One advantage of the array multiplier comes from its regular structure. Since it is regular, it is easy to layout and has a small size. The design time of an array multiplier is much less than that of a tree multiplier. A second advantage of the array multiplier is its ease of design for a pipelined architecture. The main disadvantage of the array multiplier is the worst-case delay of the multiplier proportional to the width of the multiplier. The speed will be slow for a very wide multiplier.

2.5 Wallace Tree Multiplier

Several popular and well-known schemes, with the objective of improving the speed of the parallel multiplier, have been developed in past. Wallace introduced a very important iterative realization of parallel multiplier. This advantage becomes more pronounced for multipliers of bigger than 16 bits. In Wallace tree architecture, all the bits of all of the partial products in each column are added together by a set of counters in parallel without propagating any carries. Another set of counters then reduces this new matrix and so on, until a two-row matrix is generated. The most common counter used is the 3:2 counters which is a Full Adder. The final results are added using usually carry propagate adder. The advantage of Wallace tree is speed because the addition of partial products is now O (logN). A block diagram of 4 bit Wallace Tree multiplier is shown in below. As seen from the block diagram partial products are added in Wallace tree block. The result of these additions is the final product bits and sum and carry bits which are added in the final fast adder (CRA).

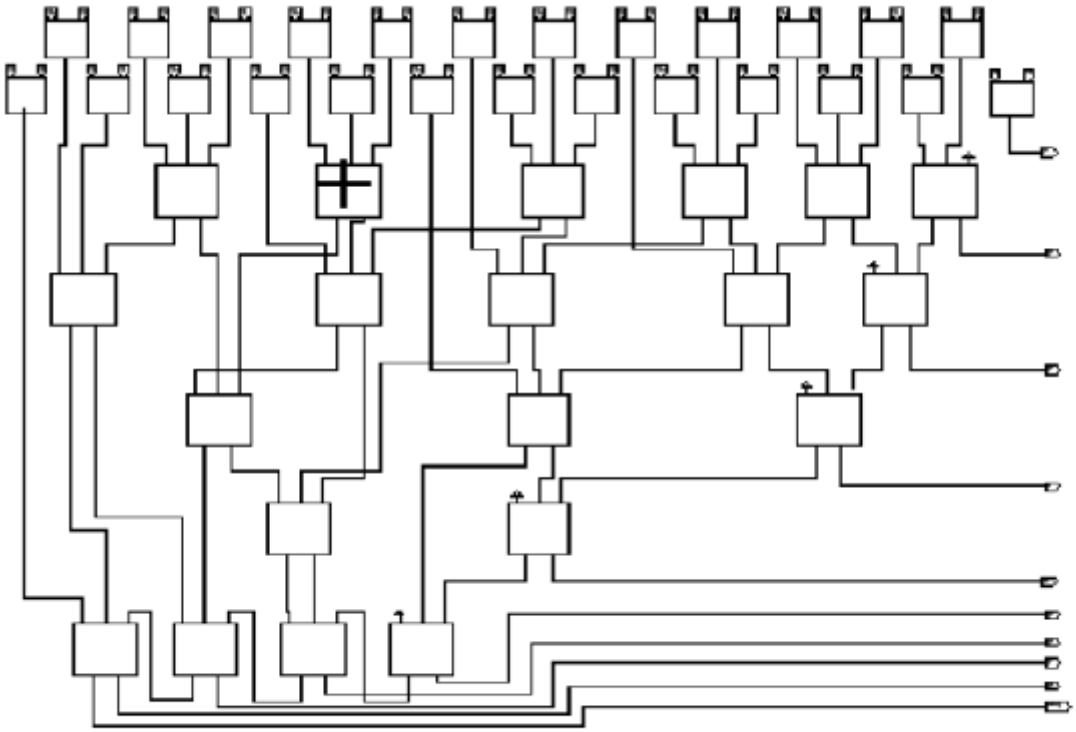

Fig. 6 Wallace Tree Multiplier

A typical Wallace tree multiplier is designed and implemented in Fig. 6. The Wallace tree is designed with the help of full adders and AND logic gates.

2.6 Modified Baugh-Wooley Multiplier

One important complication in the development of the efficient multiplier implementations is the multiplication of two's complement signed numbers. The Modified Baugh-Wooley Two's Complement Signed Multiplier is the best known algorithm for signed multiplication because it maximizes the regularity of the multiplier logic and allows all the partial products to have positive sign bits.

Baugh-Wooley technique was developed to design direct multipliers for two's complement numbers. When multiplying two's complement numbers directly, each of the partial products to be added is a signed number. Thus, each partial product has to be sign-extended to the width of the final product in order to form the correct sum by the Carry Save Adder tree. According to the Baugh Wooley approach, an efficient method of adding extra entries to the bit matrix is suggested to avoid having to deal with the negatively weighted bits in the partial product matrix.

Knowing that the sign bit in two's complement numbers has a negative weight, hence the term can be written in terms of

$$-a_3b_0 = a_3(1-b_0) - a_3 = a_3\bar{b}_0 - a_3$$

The unsigned multiplication of two four-bit digits results in the formation of 8 terms P1 to P8, where each term represents the total addition of the partial products formed. Here P8 also indicates the carry formed during the multiplication process.

The 2's complement of the 4x4 multiplication can be represented as:

				a_3	a_2	a_1	a_0
				b_3	b_2	b_1	b_0
				---	---	---	---
				$-a_3b_0$	a_2b_0	a_1b_0	a_0b_0
			$-a_3b_1$	a_2b_1	a_1b_1	a_0b_1	
		$-a_3b_2$	a_2b_2	a_1b_2	a_0b_2		
	a_3b_3	$-a_2b_3$	$-a_1b_3$	$-a_0b_3$			
---	---	---	---	---	---	---	---
P8	P7	P6	P5	P4	P3	P2	P1
---	---	---	---	---	---	---	---

Hence, the term $-a_3b_0$ is replaced with $a_3\bar{b}_0$ and $-a_3$. If a_3 is used instead of $-a_3$, the column sum increases by $2a_3$. Thus, $-a_3$ must be inserted in the next higher column in order to compensate the effect of $2a_3$. The same is done for $a_3\bar{b}_1$, $a_3\bar{b}_2$ and $a_3\bar{b}_3$. In each column, a_3 and $-a_3$ cancel each other out. The P7 column gets a $a-a_3$ entry, which is replaceable by $\bar{a}-1$. This can be repeated for all entries, yielding to the insertion of b_3 in the P4 column, and $\bar{b}_4-1$ in the column P8. There are two -1's in the eighth column now, which is equivalent to a -1 entry in P8 and that can be replaced with a 1 and borrow into the non-existing tenth column.

Baugh-Wooley method increases the height of the longest column by two, which may lead to a greater delay through the Carry Save Adder tree. This can reduce the extra delay caused by the additional Carry Save Adder level. Thus, the maximum number of entries in one column becomes six, which can be implemented with three level Carry Save Adder tree.

All negatively weighted a_3b_3 terms can be transferred to the bottom row, which leads to two negative numbers in the last two rows, where a subtraction operation from the sum of all the positive elements is necessary. Instead of subtracting a_3b_3 two's complement of a can be added b_4 times.

Modified form of the Baugh-Wooley method, is more preferable since it does not increase the height of the columns in the matrix. However, this type of multiplier is suitable for applications where operands with less than 32 bits are processed, like digital filters where small operands like 6, 8, 12 and 16 bits are used. Baugh-Wooley scheme becomes slow and area consuming when operands are greater than or equal to 32 bits.

a_3	a_2	a_1	a_0
b_3	b_2	b_1	b_0
---	---	---	---

				$\overline{a3b0}$	a_2b_0	a_1b_0	a_0b_0
			$\overline{a3b1}$	a_2b_1	a_1b_1	a_0b_1	
		$\overline{a3b2}$	a_2b_2	a_1b_2	a_0b_2		
	a_3b_3	$\overline{a2b3}$	$\overline{a1b3}$	$\overline{a0b3}$			
P8	P7	P6	P5	P4	P3	P2	P1

The Baugh-Wooley multiplier is implemented with the help of two blocks known as

- White cell
- Grey Cell

The white cell consists of a AND gate to which two inputs are fed from a and b respectively. The output of the AND gate is fed to a full adder circuit along with the sum bit and carry bit from the previous stages. A grey cell is similar to the white cell with the exception that a NAND gate is used in place of the AND gate.

The Baugh-Wooley multiplier that is designed with white and grey cell is shown in Fig. 7.

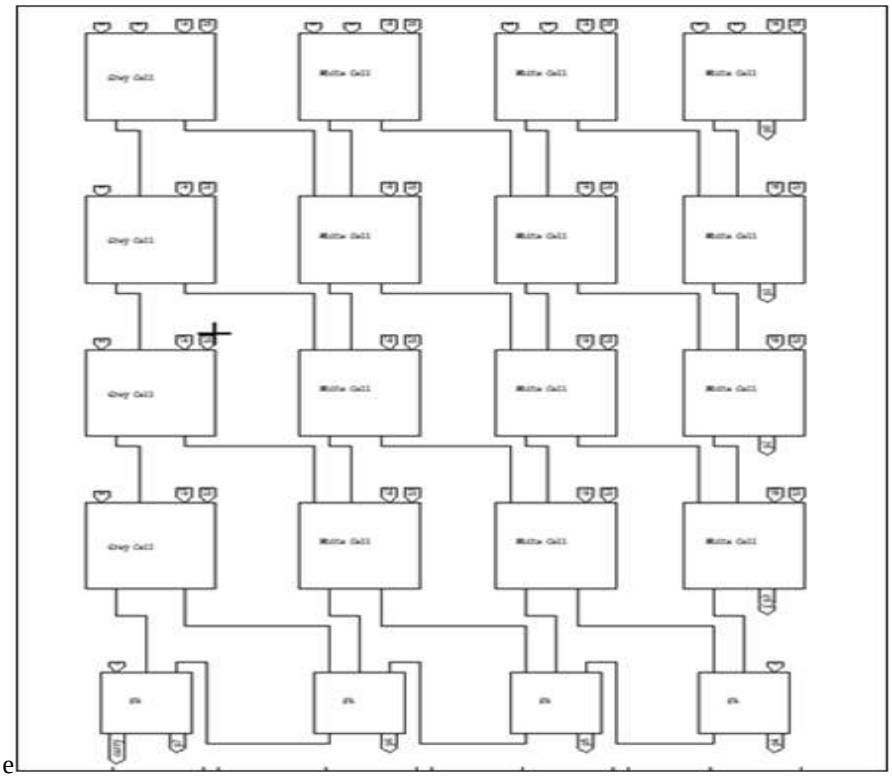

e

Fig 7. Modified Baugh Wooley Multiplier

III. SIMULATION AND ANALYSIS

3.1 Simulation Environment

All the circuits have been simulated using 90 nm technologies on Tanner EDA tool. To make the impartial testing

environment all the circuits has been simulated on the same input patterns. Tanner EDA provides of a complete line of software solutions for the design, layout and verification of Analog and Mixed-Signal (A/MS) ICs.T-Spice Pro is Tanner EDA's design entry and simulation system includes S-Edit for schematic capture T-Spice for circuit simulation, and W-Edit for waveform probing.

3.2 Performance Analysis

TABLE 1 depicts a comparison of adders of which GDI Technique shows minimum Power consumption. Based on the optimum adder, the multipliers designed are compared in terms of power and delay. It is found that Modified Baugh-Wooley multiplier is the optimum multiplier in terms of power and delay.

TABLE 1: Power Consumed Comparison of different Adder Circuit

PARAMETER	CPL	Shannon Adder	GDI Technique
Transistor Count	18	12	10
Power Consumed	0.1179	0.05624	0.002714

TABLE 2: Power Delay Comparison of different Multiplier Circuit

PARAMETER	Array Multiplier	Wallace Tree Multiplier	Modified Baugh-Wooley
Transistor Count	18	12	10
Power Consumed	0.5373	0.5118	0.4983
Delay	1.34	1.005	0.87

The simulation result for the GDI adder is as given in fig. 8.

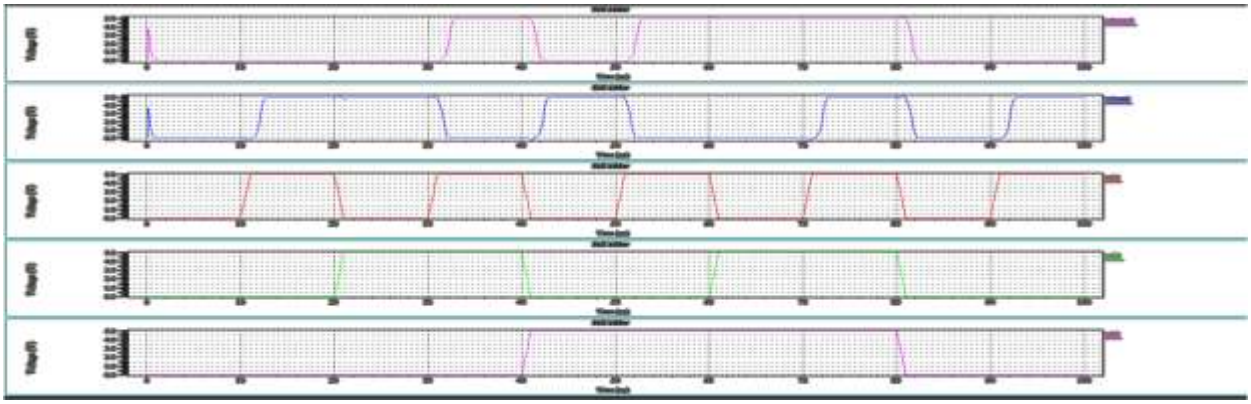

Fig. 8 Simulation result for GDI adder circuit

IV. CONCLUSION

This project resulted in a 4-bit multiplier able to handle signed multiplication. It was constructed and tested in the Tanner EDA software environment. The multiplier is implemented using the Baugh-Wooley algorithm, which is designed to use very few logical operations in each step of the multiplication operation and therefore does not suffer large cumulative gate delays. In addition, the algorithm uses common logical units to simplify design and deals with signed inputs more efficiently than other algorithms. This produces a relatively efficient calculation time, while maintaining low-cost production costs. Although the algorithm is not able to work with unsigned inputs, the goal of the project was a signed multiplier.

REFERENCES

[1] Yano, K., Sasaki, Y., Rikino, K. and Seki, K. (1996) "Top-down pass transistor logic design", IEEE Journal of Solid-State Circuits 31(6), 792–803.

[2] Pramodini Mohanty and Rashmi Ranjan, "An Eflicient Baugh Wooley Architecture for both Signed and Unsigned Multiplication", International Journal of Computer Science & Engineering Technology (IJCSET), Vol. 3 No. 4 April 2014.

[3] Niichi Itoh, Yuka Naemura, Hiroshi Makino, Yasunobu Nakase, Tsutomu Yoshihara, and Yasutaka Horiba, "A 600-MHz 54x54-bit Multiplier with Rectangular-Styled Wallace Tree" IEEE Journal of Solid State Circuits, vol. 36, no.2, Feb 2001.

[4] Antonio G. M. Strollo and Davide De Caro, "Booth Folding Encoding for High Performance Squarer Circuits" IEEE transactions on circuits and systems—ii: analog and digital signal processing, vol. 50, no. 5, May 2003.

[5] K.-S. Chong, B.-H. Gwee and J.-S. Chang, "Low energy 16-bit Booth leapfrog array multiplier using dynamic adders" IET Circuits Devices Syst., vol. 1, no. 4, Feb 2007.

[6] Shiann-Rong Kuang, *Member, IEEE*, Jiun-Ping Wang, and Cang-Yuan Guo, "Modified Booth Multipliers With a Regular Partial Product Array" IEEE transactions on circuits and systems—ii: express briefs, vol. 56, no. 5, May 2009.

[7] Jin-Hao Tu and Lan-Da Van, Member, IEEE "Power-Efficient Pipelined Reconfigurable Fixed-Width Baugh-Wooley Multipliers", IEEE transactions on computers, vol. 58, no. 10, Oct 2009.

[8] Theo A. Drane, Thomas M. Rose, and George A. Constantinides, Senior Member, IEEE, "On the Systematic Creation of Faithfully Rounded Truncated Multipliers and Arrays" IEEE transactions on computers, vol. 63, no. 10, Oct 2014.

[9] E. Walters and M. Schulte, "Fast, Bit-Accurate Simulation of Truncated-Matrix Multipliers and Squarers," Proc. 2010 Conf. Record of the 44th Asilomar Conf. Signals, Systems and Computers (ASILOMAR), pp. 1139-1143, Nov. 2010.

SOME ISSUES OF MUNICIPAL SOLID WASTE MANAGEMENT IN ALBANIA AND ESPECIALLY IN TIRANA CITY

Majlinda Alcani[1], Altin Dorri[2], Artan Hoxha[3]

[1,2,3] *Assistant Professor, Department of Energy, Polytechnic University of Tirana, (Albania)*

ABSTRACT

This paper presents the current municipal solid waste (MSW) management practices and problems in Albania in general, and especially in Tirana municipality, information on amount and composition of MSW and an overview of collection, treatment and disposal. MSWM is characterized by non-selective collection methods, insufficient coverage of collection and management system (mainly in rural areas) and improper disposal. The waste generation rates ranges from 148 to 364 kg/capita/year. The common constraints faced local governments, which are responsible for MSWM, include insufficient financial resources, insufficient information on quantity and waste composition and inappropriate technology. Actually the method of MSW disposal in Albania is mostly discharging of in open dumpsites and partially in landfills. Tirana is the capital and biggest municipality of Albania. Tirana MSW is disposed of in Sharra landfill: daily MSW amount generated (2013) is about 1 kg/person, in total about 300.000 tons/year, where organic biodegradable waste make up 64-65% of total; humidity content is 37,4% and low heat value (LHV) 8658 kJ/kg. High percentage of biodegradable fraction and LHV constitute good premises to recover energy from waste. The problems and possibilities required for MSWM are analyzed and some suggestions are given for improving it.

Keywords: Albania, solid waste management, Tirana municipality, waste collection and disposal.

I. INTRODUCTION

Albania is a developing country. The rapid urbanization and high rates of economic and social development in the last 20 years impose a great challenge to the sustainable development of our country. In this context Albanian economy has undergone a change with high growth rates, but the ecological damage and environmental pollution have increased on a large scale. One of the reasons of environment pollution is the current waste management in Albania that results in negative environmental impacts.

The amount of MSW generated in our country has increased greatly in comparison with the past (note that this study area suffers from a lack and inconsistency of data from different sources [1] and inaccurate data too. Currently there is still not an accurate database on amounts of MSW generated and collected for entire country [2]). In 2003 the amount of MSW generated in the country was about 571.218 tons, while in 2013 about 1.039.455 tons, a 81,9 %

increase [2], but not characterized by the same amount of population growth, which means that there is an increasing consumption of goods by population.

Based on these quantitative data, only an integrated solid waste management (ISWM), which includes reduction, reusing, recycling, incineration, final discharging into landfills, landfill biogas collection and use, will play an important role in the sustainable development all over the country and Tirana too, according to main objectives of National Strategy of Solid Waste Management (NSSWM) and National Plan for Solid Waste Management (NPSWM) [2]. The benefits of this strategy are in terms of reducing the depletion of natural resources, reducing pollution caused by discharge of untreated waste and indirectly saving energy. According to NSSWM and NPSWM some of the objectives are: up to 2015 the recycling/composting to be 25% of total MSW amount, and up to 2020 to be 55% of it, and increasing of solid waste amount to be stopped; up to 2025 to recover energy from 15% of MSW and solid waste amount disposed of in landfills to be 30% [2].

Implementation of integrated management systems of MSW depends on several factors, such as the status of a country, environmental requirements, environmental management strategies, energy policy, economic and technological feasibility and environmental awareness and community education [3].

Tirana is the capital and the biggest city of Albania and covers 42 km^2. It is divided into 11 mini-municipalities; it is located in the central western area of Albania, with a registered number of about 621.286 inhabitants [4], but the actual number of population is higher [2]. With regard to population density we may say Tirana is much like any other European city with 10.553 inhabitants per km^2. Tirana is the center of education, economy and culture of our country, which has undergone a huge demographic boom and economic growth in these last 20 years.

Fig. 1: The map of Albania and geographic position of Tirana.

The methods of MSW disposal in Albania are: mostly discharging it in open dumps and partially in landfills built in these last 5-6 years. Sharra landfill is the only dumpsite of Tirana municipality and the biggest one among landfills in Albania. The other landfills, with a capacity smaller than Sharra one, are: Bushat landfill (Shkodër), landfill of Rrëshen, landfill of Bajram Curri city, and is studying the feasibility of some other regional landfills, about 12 all over the country [2], [5].

The process of converting into landfill of ex-open dump of Tirana municipality began in year 2008. Before 2008 it was considered as one of the main causes of pollution in Tirana and a "hot spot" for the level of pollution caused by it [2].

In last years a lot of important regulations and legislative acts have been approved for wastes and special directives for some other topics in Albania, among which “National plan of solid waste management” (NPSWM), (2011) [2]. According to this plan, ISWM is based on hierarchy principle of waste management as follows: reduction and

prevention of waste production, reuse and recovery from generated waste, separation and selection of recycling materials and energy recovery, controlled deposition together with reducing of disposed waste quantity. But this hierarchy has not been applied in practice [2].

The building of 12 regional landfills, one of the objectives of NPSWM, will create the possibilities to profit from the economy of scale, since MSWM is an expensive service if it will be managed according to EU directives. This implies that if two or more municipalities cooperate, the individual cost of each municipality will be reduced and the possibilities to have higher service standards will increase [6].

Number of families in Albania is expected to grow at the same rate of the last 10 years, showing that in the absence of measures to mitigate the growth of quantity of MSW generated, its amount can continue to grow with the same rate as in recent years, for example from 229 kg/capita/year in 2009 in 332 kg/capita/year in 2012 [2]. The solid waste growth rate is estimated to be approximately 2% for the period 2011–2015 [7].

In this paper we analyze the management of MSW in Albania and in more detailed in municipality of Tirana, solid waste characteristics and the collection, treatment and disposal methods. Some suggestions are given to improve MSWM in the future. Anyway the lack of some important data makes it difficult to draw a general final picture with exact figures.

II. SOME CHARACTERISTICS OF TIRANA LANDFILL

Sharra landfill is the principal disposal site used by municipality of Tirana to dispose of MSW. It is located about 7 km southwest of Tirana center and its total surface is about 55,000 m^2. Its operation started as an open dump in 1995 and was operated as an uncontrolled open dump with constant open fires and deep fire burning at all times and the odors are been feeling up to some quarters to Tirana, assuming an average amount of 30.000 tons of waste burned per year (20-25% of total amount collected [8]. This site has been considered as one of the main causes of pollution of Tirana [2]. Solid waste (SW) was often exposed to the elements, vectors and scavengers and susceptible to open burning or combustion [9]. Since 2008 the open dump of Sharra has been converting in a landfill and this process is still going on, meanwhile the waste is disposed of in it. This project is one of the largest one in the field of solid waste in our country [2].

III. GENERATION AND CHARACTERISTICS OF MSW

The volume of MSW in Albania has been steadily increasing in recent years. So MSW generated in total is about 825.000 tons/year (2012) or about 266 kg/capita/year, from which the organic matter in nationally level constitutes 47,36% and in total the percentage of biodegradable matter is about 62,3% [2], and in 2013 is 1.039.455 tons MSW and the amount of inert waste is 293.361 tons [2].

The amount of MSW generated in Tirana municipality has increased with the growth of economy and urban population. Fig. 2 shows the solid waste amounts by the years for Tirana municipality. The amount of generated

MSW is not constantly growing as there are years when generated MSW amount is less than in previous year(s), which is due to inaccurate data on MSW, as mentioned above. The percentage of organic waste and biodegradable fraction for Tirana municipality are respectively 45,2% and 64,9% (Fig. 3) [7].

The total amount of MSW collected and disposed of in Tirana city in year 1997 was 87.140 tons: the average amount generated per day equaled 238,74 tons, and the daily amount generated per person was about 0,6 kg [2], [10]. In 2012 the annual total, average amount generated per day rose to 383.168 tons and 1049,77 tons, respectively [2], [10]. MSW is mainly composed of domestic refuse, road cleaning and market refuse, office, business, school refuse, as well as inert refuse, the rate of which is declining.

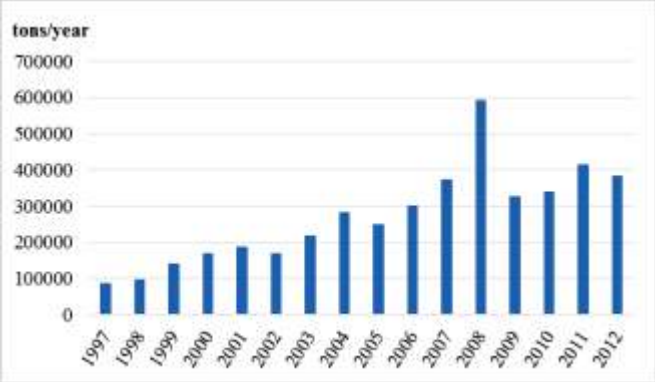

Fig. 2: Generation of municipal solid waste in Tirana municipality by years (in tons) [10], [2].

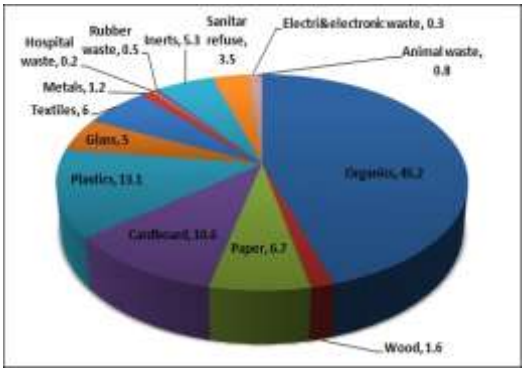

Fig. 3: Waste composition for Tirana city (% by weight) [7].

The composition and characteristics of MSW have changed during the years: so comparing waste composition data for Tirana municipality (Table 1), the percentage of amount of paper, plastic, glass and other materials has increased respectively, while the amounts (in percentage) of wood and textile, metal and food waste declined over the years. The concentration of food waste in urban solid waste makes up the highest proportion 45,2%, followed by paper and cellulose, plastics, glass and solid material, wood and textile, metal.

Table 1: Characteristics of MSW in Tirana (2001 and 2012) [2], [11], [7].

Composition, %	2001	2012
paper & cellulose	9	17,3
wood & textile	12	7,2
plastic	11	13,1
glass & solid materials	4	10,3
metal	6	1,2
food waste	58	45,2
other	0	5,7
in total	100	100

IV. MUNICIPAL SOLID WASTE MANAGEMENT

4.1 Legal basis on solid waste management

In last years a lot of important regulations and legislative acts have been approved for wastes and special directives for some other topics in Albania (e.g. Law 9010/2003 on environmental management of solid waste, Law 9537/2006 on dangerous waste management, Law 8934/2002 on the protection of environment, National Strategy of solid waste

management (2011), Law on integrated management of solid waste (2011), National plan of solid waste management (2011), etc.). According to the latter, ISWM is supported on hierarchy principle of waste management. But this hierarchy has not been applied in practice [2]: e.g. actually none of methane emitted from landfills and open damps in Albania is captured and utilized as a source of renewable energy or to flare it. Globally methane emissions from landfill are generally considered to represent the major source of climate impact in the waste sector [12].

This legal basis aims at protecting the environment and people from pollution and making sure the disciplinary measures referring to the current situation of SW management in the country at every stage: creation, collection, separation, storage, transportation, recycling, energy recovery from waste, processing and secure disposal in order to reduce the waste and its negative impact on environment and to use the techniques and best environmental practices. These laws rely on the principle of sustainable development by introducing the concepts of prevention and reduction to the creation, recycling and reuse. In year 2011 "National Strategy of solid waste management" is approved [2], which contains basic measures that lead MSW integrated management to ensure the sustainable management of SW and environmental protection. This strategy defines objectives to enable Albania to move towards meeting the environmental standards required for the EU accession and includes measures to improve waste management and reduce the risk to human health. Although the legal framework for this area is developed, these laws are often not followed by legal acts and targets set year after year to improve the situation of waste management. So actually the state in view of MSWM in our country is not good and in fact it seems the method of MSW disposal is mainly discharging it in open dumpsites and partially in landfills. The responsibility for MSW management is left to local authorities (municipalities and communes) in our country.

The situation of MSW management in Tirana municipality is one of the main problems since the city is growing rapidly. The overloaded containers are the site inevitable in some densely populated, mostly peripheral, parts of the city and those where the low income population lives. Among the main causes of pollution in Tirana is non-secure solid waste management [11].

Under the national laws and regulation of MSW management, treatment and disposal, there are local regulations and laws related to it, such as “Strategic Planning for the environment protection in Tirana city (2005-2008)”, “Tirana Municipal fees for cleaning and waste disposal”, “Environment Strategy for Tirana Municipality” [13], waste management practices, as far as collection and disposal are involved, have been historically a major concern of Tirana council in its efforts to diminish the causes that lead to the deterioration of public health. The issue of SW management is defined as one of the five priorities of Tirana Municipality [13], where the responsibility for solid waste management problems is on Directorate of solid and municipality waste management [14]. MSW system includes mainly collection sites, roads washing and cleaning, recycling (partially) and final disposal.

4.2 Municipal solid waste collection systems

Source-separated collection of household-generated MSW is one of the key steps for integrated solid waste management. Source–separated collection means that MSW is first classified into several different parts such as

composting material (food waste), combustible materials (fiber and paper) and recyclable materials (metals and glass). Once classified these different waste types are then collected and forwarded to the appropriate users. Unfortunately the source–separated collection at the household level has not yet been implemented in our country and Tirana city too, although a lot of efforts to do this. At present the main collection systems of MSW are as follows:

a) Residential refuse: individual households place the refuse into a container nearby, where the refuse is collected and sent directly to the damp by the private service operators, which municipalities have contracted to. In order to prevent pollution caused by waste, waste bins are provided with a cap. But this does not prevent the scavengers to take out recyclable waste and then leave the bins open. Services that are covered by private service operators are collection and transportation of waste and waste markets; cleaning the roads and pavements; cleaning of urban areas with workers; washing and disinfection of waste bins; collection and transportation of solid waste and large volume waste; main road maintenance. Institutions place their refuse into the road containers too, except for paper, plastics and juice cans that are collected from individual companies or scavengers in order to be recycled.

b) Road and public places cleaning refuse: the cleaning of roads, public areas and disposal of this refuse is mainly responsibility of one department of municipalities. The cleaning refuse is first collected into nearby containers and is sent then to dumpsites by collection vehicles.

c) Separated collection: this kind of collection is in two forms: organized and not organized. According to the second method, parts of waste such as aluminum and other metals, paper, cardboard and plastics are often collected by scavengers from roads, markets and garbage bins and then sold. Batteries, electronic waste, etc., are collected in Tirana in this way today. Over the years, many campaigns have been organized by Tirana municipality and others [11] to raise the awareness of the need to collect separately different solid urban waste. For this purpose containers have been placed along the roads. Nevertheless the campaigns were not very successful, mostly for two reasons: the first and the main reason is related to the scavengers who generally collect cans, ferrous metal, plastics and sell them individually; the second reason refers to the community which did not show too much understanding for the idea. There is separated collection of paper, glass and plastic fractions through separated bins in some cities (Lezha, Pogradec, Tirana, etc.), but mostly these waste streams end up with the rest of waste in dumpsites.

The organized separated collection is especially performed for paper and cardboard: so, a private company, in agreement with the Municipality of Tirana [10], draws every day from some markets quantities of 1-5 tons of paper and 3-4 tons of cardboard, toilet paper, napkins, etc. with a daily manufacturing capacity of 4-5 tons. The main sources of collecting paper for recycling are: commercial streets, embassies and international institutions and private firms [10]. Another organized classification of MSW is realized in the field of Sharra landfill. The profit of separated collection of some waste fractions lies, first, in reduction of waste amount that will be sent to landfill and, secondly, in saving of natural resources and energy. Tirana Municipality has built a whole structure to achieve integrated management of SW. At present MSW is collected in a mixed state, but residents can volunteer to participate in the source-separated collection.

4.3 Recycling and treatment of MSW

Until the early 2009 although a part of waste was separated for recycling, but unfortunately there are no accurate data for this quantity. The recycling materials in Tirana are paper and cardboard, plastic and metal. In Tirana each recyclable glass bottle is worth about Lekë 4-11 (depending on the type of bottle) (US$ 0,04-0,1), aluminum can waste, Lekë 90 (US$/kg 0,8) per kg, and plastic waste, Lekë 25 (US$ 0,227) per kg. Waste paper and cardboard are worth about Lekë 3.5 to 5 (US$ 0,03–0,045) per kg. Actually there are 60 recycling company and 12.000 recycling individuals for metals, plastics, paper, etc, [2]. These recyclable materials are often collected at the source or from waste bins by scavengers, but recently it is organizing in the field of Sharra landfill. After collection, these items are sent to factories for recycling, except of aluminum waste, which is exported as there is not any kind of this industry in our country. A good experience in this area is collection of glass bottles by firms that produce and trade their products to them with, for example, beer bottles.

There are designed 8 regional plans and are in process four other plans for the period 2012 to 2025 according to the Law nr. 10431 (2011): “For environment protection”, and Law nr. 10463 (2011): “For integrated management of waste”. These plans are based on integrated management of SW in accordance of EU directives [2]. The plans predict separated collection in three different kinds of bins.

4.4 Composting

This treatment means of recapturing the value of MSW, after recycling of some waste fractions, is through the use of the natural biodegradation process. Composting is widely used in western countries and had been used in our country in the past (period in which the daily amount generated per person was very low), but today is almost missing this solid waste treatment. As we mentioned above, one of the main objectives of “National plan of integrated solid waste” [2] is for solid waste composting/recycling: 25% of total MSW up to year 2015 and 55% of MSW up to year 2020. Unfortunately there isn’t any data about this treatment up to now.

4.5 Incineration of MSW

One other option to recover energy from MSW is to convert the energy stored in waste through incineration of waste. Although many combustibles are recyclable, there is often a higher total value in burning the waste for energy than in recycling it. Currently, the incineration of MSW is not used in our country and in Tirana too. Incineration of MSW is mentioned as one of the integrated management options of MSW in the "National environmental strategy" and “Report on the environment state 2007-08" [2]. It would be more effective than uncontrolled burning of MSW that often occurs in open areas of our country. In the NPSWM (2011) [2] is predicted installing of an incinerator near to one of the cement plants to burn danger waste and MSW with energy recovery, but isn’t given any exact period or some other information about this.

4.6 Disposal system of Tirana MSW

Until year 2008, a simple landfill or an open dump was used for solid waste disposal in Tirana city. This simple landfill treatment method is still broadly used mostly in Albania.

The dump of Sharra, only 7 km away from the center of Tirana, with an area about 5 hectares, was designated as a "hot spot" area because of the pollution it caused. Fires were present at all times and the smell felt up to some quarters of Tirana. Problems hampered further as long as hazard waste were sent, and continue on, together with urban waste in Sharra dumpsite [15].

Tirana is now using a new and standardized MSW treatment method to protect the environment and the people's health. The first standard sanitary landfill in our country is just Sharra landfill and it is still in the process of improvement. But this landfill site being near a great urban center and surrounded during the last few years by many illegal building (less than 200-300 m away from landfill), causes still sanitary and environment problems, constituting a high risk for the area population. The project of Sharra landfill is one of the largest one in the field of SW in our country [2]. The project worth was 4.6 million euros from the Italian Government, with the main aim at controlling the environmental situation connected with urban waste collection site. The project included construction works, machinery and equipment necessary to transform the open dump into a sanitary landfill. "Waste Management of Tirana" was a project to reduce the health and environmental risks of the Sharra area. The waste collection and treatment in the landfill would be carried out in accordance with technical concept of a sanitary landfill. Landfill gas (LFG), generated in it, is planned to be collected by respective piping and to flare it. The daily treatment capacity of the landfill is about 1000 tons MSW, while the overall capacity of this area, after reconstruction, will be 1,9 million cubic meters and its capacity is enough for about 6-8 years [7]. Another landfill will be built in the future for Tirana city, but we have no data for this new project. Up to year 2012 are building some other landfills in Albania with capacity smaller than Sharra landfill. The building of 12 regional landfills all over the country, according to NPSWM [2], will create possibilities to profit from economy of scale, since solid waste management is an expensive service if it will be managed according to EU directives.

4.7 MSWM cost and tariff setting

The financing of the waste management infrastructure and systems in Albania is provided by municipalities. The management of MSW is associated with a significant cost, which is to be borne by all those who need this service (community and businesses) by paying the "green and cleaning tax". The determination of waste tax is competence of municipal council of local government and therefore is different for various municipalities. This tax is different for residents and business too. The average income for one family in Albania is 37.150 Lekë/month (US$ 350/month), or 445.800 Lekë/year (US$ 4.200/year) [1]. According to EU standard, in which this tax represents 0,8% of net family income, that tax would be 3566,4 Lekë/family/year (US$ 33/family/year) [1]. Meanwhile in developed country this tax represents 1,2% of net family income and according to this, this tax would be 5349,5 Lekë/family/year (US$ 50/family/year [1]. So in these conditions, Tirana Municipality has changed the tax value

over the years: in year 2009 the residents paid 3.000 Lekë/year (about US$ 30/year), while in 2010 this tax was increased to 5.000 Lekë/year (about US$ 50/year) [11]. This tax is lower in the other cities of Albania: for example in Durrës municipality (the second largest one in our country) the residents pay 1.000 Lekë/year (US$ 10) in 2009. The commercial sectors pay according to their activity [1]. The revenue from the solid waste service does not cover the cost of offering the service. According to data of Tirana municipality [11], the rate of cost recovery of the services offered is 61% and the rest of 39% from other income; for Durrës municipality was respectively 55,8% and 44,2%. The increase of waste tax value will affect the clearance of this balance in the future.

V. SOME PROBLEMS AND OPPORTUNITIES TO IMPROVE MSW MANAGEMENT

In order to prevent and reduce the pollution of SW mismanagement, two problems have to be solved: firstly, closure and recovery of existing open dumpsites all over in Albania. This process must be secure, in accordance to relative standard, avoiding all problems of environment pollution; secondly, the building of 12 regional landfills according to engineering requirements. As Tirana city develops economically and grows in population, the problems of SW management will become more and more important to solve. The only landfill site, formerly located in the suburb, is in a populated zone now and this reality is mostly all over the country.

Tirana landfill capacity is also valid for a few following years. In these conditions, after landfill site closure, a future challenge for Tirana is to find a way to speed up the recovery and stabilization of site and this one can serve a new purpose. There is a possibility to collect and recover energy from biogas landfill in Sharra landfill. Benefits from landfill gas energy projects are [16]: reduce emissions of GHGs; improve air quality; reduce environmental compliance costs; increase economic benefits through job creation and market development; conserve land, etc.

Combusting captured methane to generate electricity produces two byproducts: water and carbon dioxide. Carbon dioxide that is emitted from LFG energy projects is not considerably to contribute to global climate change, because the carbon was contained in recently living biomass and would have been emitted through the natural decomposition process [17].

5.1 LHV of MSW is a premise to incinerate it with energy recovery

Another option of energy recover from MSW is incineration of it in dedicated waste to energy plant. This is in accordance of integrated waste management: all the waste treatment options should be considered and implemented, but of course, in accordance with the specific conditions in the case study. Incineration of MSW is ranked in the Reports on the Environment State [2] as one of the options that will improve waste management in our country.

The reasons for which I think incineration is viable in Tirana municipality are: a) the considerable amount of waste generated in Tirana, the LHV not lower (about 8658 kJ/kg) [9], the difficulties to provide space available for new landfills - constitute premises in favor of waste incineration. Waste incineration can be implemented not only for Tirana city, but in the framework of regional management of MSW, are being created the conditions to implement

this technology treatment; b) medical waste is often mixed with urban waste and sent to landfill together. The biggest hospital centers of our country are concentrated in Tirana and the media have often highlighted that their incinerators are not always running [9]. There are set up and operate a great number of private health centers (such as hospitals, diagnostic clinics, dental clinics, etc.) and they put their waste in the waste bins, too; c) many types of hazardous waste such as domestic appliances, electronic devices, batteries, etc., are often collected together with solid urban waste, because there is no selected collection with special bins [2].

5.2 Lack of an efficient and suitable MSW collection method

The refuse in waste containers gets mixed with solid waste but scavengers often sort it out to remove recyclable and reusable items. There is often a sight not pleasant to look at and a polluted environment caused by the sorting that scavengers do at the refuse disposal sites. After they are through with it, waste bins with lids remain open and parts of the waste spread out across the land. The waste collectors are quite selective about which types of waste they will take away; waste with economic value will be sorted and removed but other types of waste such as batteries are left behind causing harm to the environment. Unfortunately, these informal waste recovery systems make it harder to regulate and implement a more efficient and standardized waste treatment system. This kind of informal waste recovery system occurs almost in all cities of Albania.

5.3 Lack of accurate data and follow up activities

The responsibility for waste service provision has been delegated to the lower level of local government (municipalities and communes), but that has not always proved efficient. Furthermore, this allocation of responsibility is not associated with the establishment of service provision quality level standards; in addition, local government units suffer the lack of financial resources through which to sustain and improve public services, among which the waste service.

Actually there are made efforts in level of local and center governments to build appropriate policies regarding SW management. This legal basis define objectives and tasks for solid waste recycling, composting and other issues for sustainable solid waste management, but the reports that follow up do not contain data whether these goals and tasks are achieved and performed. Unfortunately, there are not yet accurate quantitative data on the waste being generated in the country. There are still discrepancies in different data sources, despite of the fact there is an objective of NPSWM to build a waste database [1], [7]. The accurate information on the quantity and type of material being generated is a basis to carry out studies that will lead the effective management of municipal solid waste.

5.4 Some opportunities to improve MSW management

To meet the needs of an ISWM system, the following aspects should be improved in the future:

a) MSW collection methods should be specialized according to the different area situations. An efficient and effective separation and collection of SW materials may require different methodologies. Tirana municipality has

performed a considerable work to improve the separated collection through awareness campaigns in schools or institutions or through pilot projects in different areas of the capital. The investigation shows that citizens are highly aware of the usefulness of sorting the refuse; they understand that sorting their refuse before collection will reduce the amount of solid waste produced and facilitate the recycling of materials as well as reduce the overall cost of waste disposal. But Tirana municipality should implement a collection system that encourages citizens to separate their waste before collection.

b) Improving the waste collection systems: currently, Tirana has a formal waste sorting, realized in the field of Sharra before disposed of them, except informal ones of individual collectors in the streets. This formal waste sorting creates employment opportunities for the informal waste collectors and better protect of their health. Local governments all over Albania should consider organizing and managing the informal system so that it can be better regulated and formalized into a waste collection plan overseen by the municipal institutions; c) Implementing an integrated disposal system: this system should include except separated collection and recycling, energy recovery from waste, through waste incineration and landfill biogas (LFG) use. Although advantages of incineration of waste, such as reduction of the MSW quantity, thereby reducing the demands for large areas available for new landfills and increasing the existing landfill life and its consideration in NPSWM, this treatment is unlikely to be implemented in a near future.

On the other hand, it seems that landfills will be the only method of MSW disposal of. In this conditions LFG collection systems should be installed in landfills; biogas collected can be used to produce energy or if it is not possible, to flare it. This option can be implemented in Tirana landfill, where the percentage of biodegradable matter is about 65% of total amount and it is possible to recover energy from it. Developing and implementing of LFG recovery project for energy utilization can generate positive socioeconomic and environmental impacts besides reduction of GHGs.

VI. CONCLUSIONS

The Albanian economy has undergone a lot of changes with high growth rates, rapid urbanization and population growth in last 20 years, which affected in increasing of MSW at a rate of about 81,9% from year 2003 (the total amount of MSW generated in the country was about 571.218 tons) to year 2013 (about 1.039.455 tons MSW). In Tirana city the average amount of MSW generated was about 1 kg/capita/day in 2012. Compared to 2001 when it was 0,739 kg/capita/day, the increase was by 35,3 %. LHV of Tirana's MSW is on average about 8658 kJ/kg. Food waste accounts for about 45,2% and appears to have decreased during these years, due to increase of packaging materials, as result of a change in consumption patterns. The remaining of SW is made up of plastic (13,1%), paper and cellulose material (17,3%), wood and textile (7,1%), glass and solid materials (10,3%), metals (1,2 %), etc.

Sorting and separating waste at the source is considered to be an effective method of recycling waste items, but this method of collection has not been yet applied in our country. There are two or three cities that applied separated collection of MSW in the streets, but these waste fractions end up in dumpsites with the waste rest in general.

Although efforts to implement street separated collection in Tirana Municipality, actually the MSW are collected in a mixed state. Tirana municipality should implement a collection system that encourages citizens to separate their waste before collection.

The method of waste disposal in Albania is mainly discharging it in open dumps and partially in landfills built in some areas of the country. Tirana dumpsite is converted into a sanitary landfill, ending somewhat the pollution caused by uncontrolled dumping of waste. It is designed to install the system of landfill gas collection. Energy recovery from LFG collected would be the best option, but in absence of it, at least LFG collected should be flared in order to reduce methane emissions into the air, as one of the most potent greenhouse gases. Another acceptable option is MSW incineration with energy recovery, since LHV of Tirana's MSW meets requirements for successful incineration. This method will be a good option in the context of the new organization of waste management in 12 regional landfills, instead of simple disposal in landfills.

REFERENCES

[1] Durres Municipality, IFC: Local Plan of Durrës municipality waste management 2010 - 2025, May 2010, URL: http://www.durres.gov.al (20.10.2014)

[2] Report on the Environment State: 2001-2002, 2003-2004, 2005-2006, 2008, 2009, 2010, 2011, 2012, 2013, Ministry of Environment, Tirana, Albania 2014. URL: http://www.moe.gov.al/ (10.09.2014.).

[3] Magrinho, A.; Didelet, F.; Semiao, V. Municipal solid waste disposal in Portugal. The Web version (2006). http://www.elsevier.com/locate/wasman. (17.05.2006).

[4] Census 2011, Population and Housing Census in Albania". Institute of Statistics of Albania. 2011.),

[5] National Strategy of Environment, Ministry of Environment Forest and Water Administration, Tirana, Albania, 2010. URL: http://www.moe.gov.al/. (12.06.2012.).

[6] Gjoka K.: Disposal and treatment of urban solid waste. Can Albania Afford Urban Solid Waste Management? (2008). URL: www.logincee.org/file/17972/library. (20.06.2011.).

[7] National Plan of Waste Management, Ministry of Environment Forest and Water Administration, Tirana, Albania, 2010. URL: http://www.moe.gov.al/. (12.06.2012.).

[8] Gjoka, K.; Shehi T.; Nepravishta F. Assessment of the risk to human health from landfill gas at Sharra Landfill, Tirana–Albania, Journal of Environmental Science and Engineering B, 1, 11(2012), pp. 1239-1244. URL: http://davidpublishing.org/show.html/10643, (20.07.2013.).

[9] Alcani, M.; Dorri A.; Hoxha A. Management of municipal solid waste in Tirana: problems and challenges. Technical Gazette, 17, 4(2010), pp. 545-551.

[10] Statistics by year for solid waste deposited in Sharra dumpsite (1997-2009)//The Web version, http://www.tirana.gov.al/common/images/mbetjet_e_ngurta_viti (20.03.2010).

[11] Municipal of Tirana, Directorate of Environment Management: Information on waste management. (21.04.2010)

[12] UNEP Waste and Climate Change, Global Trends and Strategy Framework, UNEP 2010. URL: http://www.unep.org/ietc/Portals/136/Publications. (20.09.2013.).

[13] Strategic Planning for the environment protection in Tirana city (2005-2008) // The Web version, http://www.tirana.gov.al (03.11.2005).

[14] http://tirana.gov.al/sq/Drejtoret--e-pergjithshem-1

[15] O. Manastirliu, P. Lazo: "Environmental impact of Sharra landfill In Tirana,Albania, regarding water system". International Journal of Ecosystems and Ecology Science (IJEES), Volume 2/3, 2012, Page 217-222; (ISBN 978-9928-4068-5-9) https://sites.google.com/site/injournalofecosystems/template/volume-2-3-2012

[16] U.S EPA: Landfill methane utilization, Dec 10, 2008. URL: www.epa.gov/slclimat/documents/pdf/7.4. (10.06.2011).

[17] U.S EPA: Landfill methane utilization, Dec 10, 2008. URL: www.epa.gov/slclimat/documents/pdf/7.4. (10.06.2011).

ELDER MONITORING USING GSM AND GPS WITH AN ENHANCED FALL DETECTION SYSTEM

S.Vikneswaran

M.E Student, Raja College of Engineering and Technology, Madurai, TamilNadu, (India)

ABSTRACT

An enhanced fall detection system is proposed for elderly person monitoring that is based on-body sensor operating through consumer home networks. The on-body sensor which consists of accelerometer and cardio tachometer is used in this model. In this proposed system accelerometer measures overall vibration by means of using Signal Magnitude Vector and trunk angle. Here Signal Magnitude Vector is used to calculate the acceleration caused due to movement of the body with respect to xyz axis and trunk angle is used to calculate the posture of the elderly person during fall event. Cardio tachometer is used to measure the pulse rate. A typical fall event ends with the person lying on the ground or leaning on walls, or furniture that will cause a significant change in trunk angle. In this case, it is desirable to consider changes on the trunk angle to detect whether the detected acceleration was due to a fall event. The set values of acceleration and pulse provides accuracy to the system avoiding false detection. This system is connected to GPS to measure the latitude and longitude values and GSM for communication purpose which is unique.

Keywords: Methodology of Detection, Fall Detection Rate, Global Positioning System.

I. INTRODUCTION

In recent years, many types of consumer electronic devices have been developed for home network applications. A consumer home network usually contains various types of electronic devices like sensors and actuators, so that home users can control them in an intelligent and automatic way to improve their quality of life. Some representative technologies to implement a home network are Ultra Wide Band, Bluetooth and accelerometer. Accelerometer is suitable for consumer home networks because various sensors can be deployed to collect home data information in a distributed, self-organizing manner with relatively low power. The structure of projected fall detection system core structure relies on a Micro programmed Controller Unit (MCU). The cardio tachometer and accelerometer are integrated on one single board, recording real time acceleration and heart beat. Each acceleration and heart beat information is first captured by analog-to-digital converter (ADC). Then, the digital signal is transmitted to the MCU for any process. The system is complemented with a customer interface designed to watch information in period. This system is designed such that it can help the elder persons who are residing in the house.Global Positioning System consists of a constellation of 21 satellites orbiting the earth every 12 hours at a height of approximately 10,900 nautical miles. Six orbital planes contain four satellites each and have an angle of inclination of 55 degrees with respect to the plane of the earth's equator.

Control of the system is aided by five globally located monitoring stations. These stations continuously evaluate the system's performance and upload timing and health data which is then rebroadcast to the user.

II. METHODOLOGY OF DETECTION

An initiatory estimation of the body movement can be obtained from the Signal Magnitude Vector (SMV) defined as:

$$SMV = \sqrt{Acc_x^2} + \sqrt{Acc_y^2} + \sqrt{Acc_z^2} \ldots\ldots (1)$$

Where Acc_x , Acc_y ,Acc_y , represent the outputs of x-axial, y-axial and z-axial, respectively. Since the direction of possible falls cannot be predicted, it is inappropriate to use only one output of the axis. At the beginning, acceleration due to gravity, *g*, liesin the z direction.The acceleration changes along with body movement, furthermore, vibration becomes significant when the fall happens. A typical fall events ends with the person lying on the ground or leaning on walls, orfurniture that will cause a significant change in trunk angle. In this case , it is desirableto consider changes on the trunk angle to detect whether the detected acceleration was due to fall event. Trunk angle, θ, can be defined as angle between the SMV and positive z-axis and can be calculated by trigonometric function as

$$\theta = \arccos\left(\frac{Acc_z}{SMV}\right) \ldots\ldots (2)$$

III. RELATED WORK

Many fall detection techniques are available to detect fall detection rate, some of the techniques are described in this existing system which are illustrated below very clearly.

I.Akyildiz, W.Su,Y.Sankarasubramaniam, And E.Cayirci, have designed “Wireless Sensor Networks: A Survey”. Which describes two thirds of elderly with hip fracture never regain their pre-fracture activity status and one-third require nursing home placement. Given these facts, human behavior analysis can contribute with a strong point both on the prevention and detection of this type of hazardous situation. Systems monitoring the elderly living space could analyze potential risks of falls occurring and identify potential causes of falling and consequently correct adaptations on the living space. In terms of fall detection, it would be advantageous, for those situations where full monitoring is not possible, to have systems with the capabilities for alarming cares about abnormal situations. This system use only alarm to indicate the elders falling situation.

M.Yu, A.Rhuma, S.Naqvi, L.Wang, And J.Chambers, have proposed “A Posture Recognition-Based Fall Detection System For Monitoring An Elderly Person In A Smart Home Environment”.In this paper global (ellipse) and local (shape context) features from static postures and an improved Directed Acyclic Graphic Support Vector Machine (DAGSVM) is applied for posture classification. After classifying different postures, certain rules are set to detect falls. This fall detection system is shown by evaluation on real datasets to achieve a good fall detection performance. For a comprehensive evaluation of this fall detection system, the volunteer is asked to simulate 32 fall activities and 64 non-fall activities. Final results which show that 31 out of 32 (96.88%) falls can be detected while only 3 out of 64 (4.7%) non-falls were mistaken as falls; and a high fall detection rate is obtained with an acceptable false detection rate.

Y.W Bai, S.C. Wu, And C.L. Tsai have designed "Design And Implementation Of A Fall Monitor System By Using A 3-Axis Accelerometer In A Smart Phone"Here the Various fall-detection solutions have been previously proposed to create a reliable surveillance system for elderly people with high requirements on accuracy, sensitivity and specificity. In this paper, an enhanced fall detection system is proposed for elderly person monitoring that is based on smart sensors worn on the body and operating through consumer home networks. By utilizing information gathered from an accelerometer, cardio tachometer and smart sensors, the impacts of falls can be logged and distinguished from normal daily activities. The proposed system has been deployed in a prototype system as detailed in this paper. From a test group of 30 healthy participants, it was found that the proposed fall detection system can achieve a high detection accuracy of 97.5%, while the sensitivity and specificity are 96.8% and 98.1% respectively.

S.Demura, S.Shin, S.Takahashi, And S.Yamaji, have developed "Relationships Between Gait Properties On Soft Surfaces, Physical Function, And Fall Risk For The Elderly" Which describeshealthcare technologies are slowly entering into our daily lives, replacing old devices and techniques with newer intelligent ones. Although they are meant to help people, the reaction and willingness to use such new devices by the people can be unexpected, especially among the elderly. We conducted a usability study of a fall monitoring system in a long-term nursing home. The results gave us useful insights, leading to ergonomics and aesthetics modifications to our wearable systems that significantly improved their usability and acceptance. New evaluating metrics were designed for the performance evaluation of usability and acceptability. This system took motion pictures only. In case of falling any objects it can took a image and send an indication. Where there any elder person falling means the image is sending delay. In case the picture was not accuracy, the message is not sent.

IV. PROPOSED WORK

The structure of proposed fall detection system whose core structure is based on a Micro programmed controller unit. The accelerometer sensor along with cardio tachometer is integrated on one single board, recording real time acceleration and pulse rate. Both acceleration and pulse rate are first captured using an analog-to-digital converter. Then the digital signal is transmitted to the MCU for further processing. The heart rate is captured by a pulse pressure sensor and also passed directly to the MCU and the location is detected using GPS and communicated using GSM. The message can be set to reach the nearest hospital and the relatives. The message contains latitude and longitude values of accident place. Thus, wearable sensor based methods are considered in this research. By using information from an Accelerometer and cardio tachometer, the impacts of falls can successfully be distinguished from activities of daily lives reducing the false detection of falls. This system has a set value to distinguish a high fall detection rate and low false detection rate.

4.1. Merits

- This system has a unique way of tracking location through GPS,
- GPS system is used to measure latitude and longitude values of the location, so that tracking can be easy,
- GSM used to communicate the nearest hospital and relatives,
- Message to the hospital means immediate aid can be provided without any human intimation.

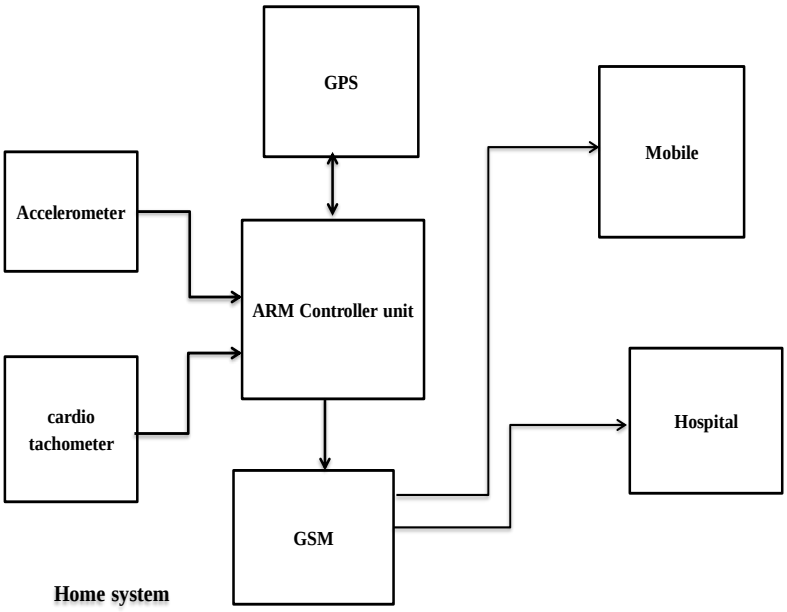

Fig4.1: Functional Block Diagram

4.2. Block Diagram Description

This block diagram comprises MCU, mobile interfacing circuit, signal conditioning circuit (sensor).The GSM MODEM is interfaced to the MCU by using RS232 interface. The sensor may be a load cell or sprain gauge which is used to detect the level of the impact and the signal to the MCU.If the controller predicted that the sprain gauge value is more than the critical limit then the information is sent to the presto red number in the microcontroller through SMS to Hospital or their relation to rescue.Liquid crystal display is very important device in embedded system. It offers high flexibility to user as he can display the required data on it. But due to lack of proper approach to LCD interfacing many of them fail. Many people consider LCD interfacing a complex job but according to me LCD interfacing is very easy task, you just need to have a logical approach. This page is to help the enthusiast who wants to interface LCD with through understanding.RS232+5V-Powered, Multichannel RS-232 Drivers/Receivers. The LPC2101/2102/2103 microcontrollers are based on a 16-bit/32-bit ARM7TDMI-S CPU with real-time emulation that combines the microcontroller with 8 kB, 16 kB or 32 kB of embedded high-speed flash memory. A 128-bit wide memory interface and unique accelerator architecture enable 32-bit code execution at the maximum clock rate. For critical performance in interrupt service routines and DSP algorithms, this increases performance up to 30 % over Thumb mode. For critical code size applications, the alternative 16-bit Thumb mode reduces code by more than 30 % with minimal performance penalty. Due to their tiny size and low power consumption, the LPC2101/2102/2103 is ideal for applications where miniaturization is a key requirement. A blend of serial communications interfaces ranging frommultiple UARTs, SPI to SSP and two I2C-buses, combined with on-chip SRAM of 2 kB/4 kB/8 kB, make

these devices very well suited for communication gateways and protocol converters. The superior performance also makes these devices suitable for use as math coprocessors. Various 32-bit and 16-bit timers, an improved 10-bit ADC, PWM features through output match on all timers, and 32 fast GPIO lines with up to nine edge or level sensitive external interrupt pins make these microcontrollers particularly suitable for industrial control and medical systems.

4.3. Flow Chart

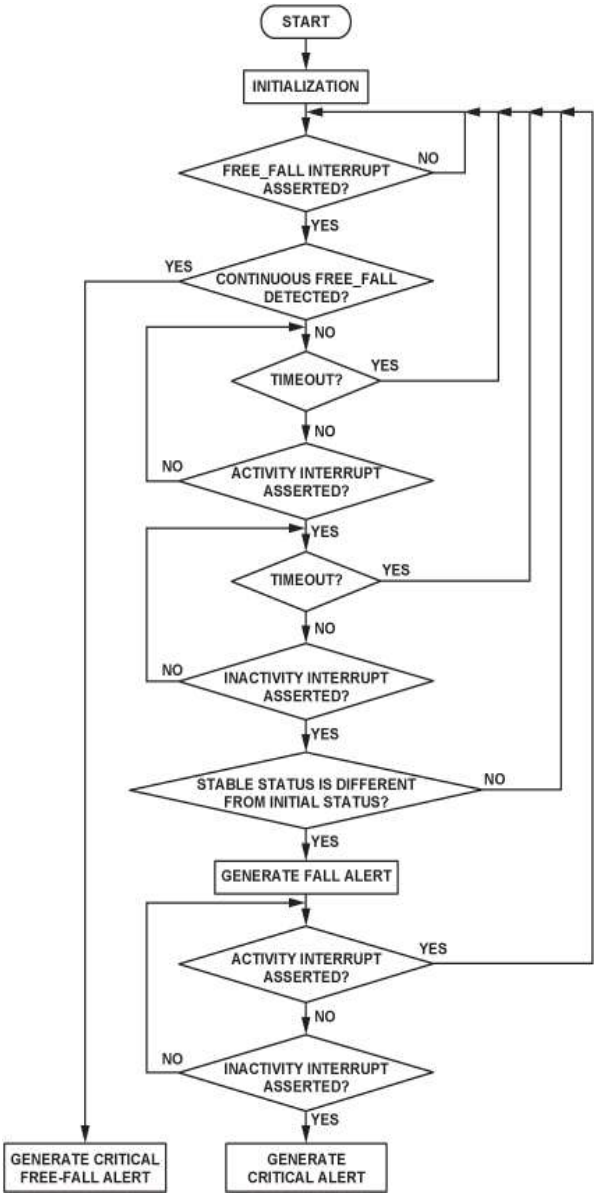

Fig 4.2: **Flow Chart**

V. RESULT AND DISCUSSION

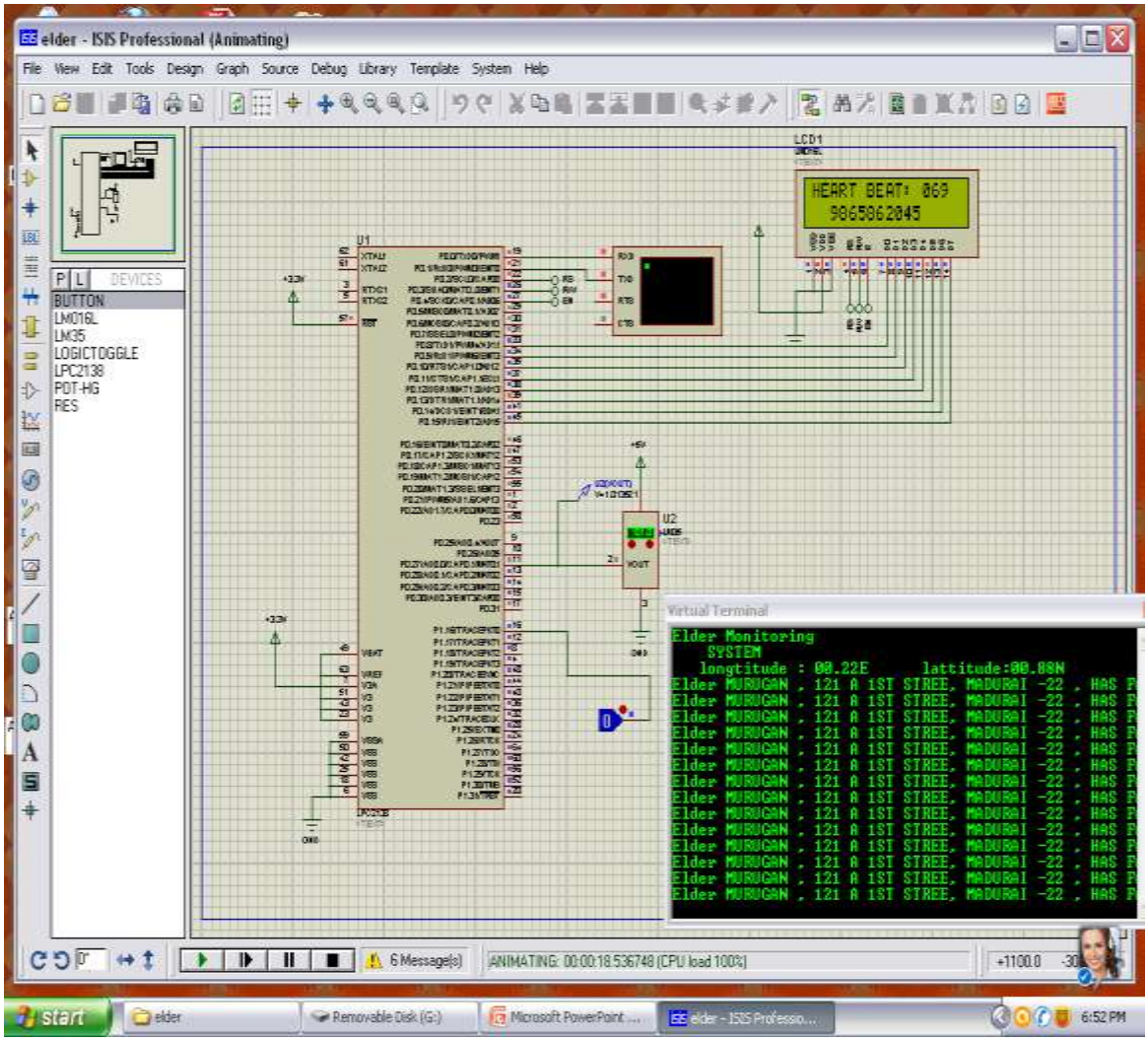

Fig5.1: **Proteus simulation model (output)**

When acceleration value is above 1.01g and heart rate is below 79/pulse, then system will send message and track the location of impact of elderly people. When acceleration value is below 1.01g and heart rate is above 79/pulse, then system fails to send message because there is no fall event is tracked. So there is less chance for false fall detection rate.

VI. CONCLUSION

A sensor interface design based on Advanced Risc Machine (ARM) system is proposed. An enhanced fall detection system using on–body smart sensor is implemented and deployed which can successfully detect accidental fall and decreased pulse rate in elderly people. Accidental falls can be detected by using wearable sensor (accelerometer) by setting a value of 1.01g, decreased heart rate can be detected using a wearable sensor (Cardio tachometer) by setting a value of 79 as pulse rate. Ideally combining GPS and GSM with this on-body smart sensor can help to communicate the outputs and track the location of impact of elderly people. This

wearable sensor system can be of good use to monitor elderly people and GPS location tracking along with this system provides a logical solution which is unique in this proposal.

REFERENCES

[1] I. Akyildiz, W. Su, Y. Sankarasubramaniam, and E. Cayirci, "Wirelesssensor networks: a survey," Journal of Computer Networks, *vol. 38, no.4, pp. 393-422, March 2002*.

[2] M. Yu, A. Rhuma, S. Naqvi, L. Wang, and J. Chambers, "A posturerecognition-based fall detection system for monitoring an elderly personin a smart home environment," *IEEE Trans. Infor. Tech. Biom., vol. 16,no. 6, pp. 1274-1286, Aug. 2012.*

[3] Y.W Bai, S.C. Wu, and C.L. Tsai, "Design and implementation of afall monitor system by using a 3-axis accelerometer in a smart phone,"*IEEE Trans. Consumer Electron., vol. 58, no. 4, pp. 1269-1275, Nov.2012*.

[4] S. Demura, S. Shin, S. Takahashi, and S. Yamaji, "Relationshipsbetween gait properties on soft surfaces, physical function, and fall riskfor the elderly," Advances in Aging Research, *vol. 2, pp. 57-64, May2013.*

[5] J. Yick, B. Mukherjee, and D. Ghosal, "Wireless sensor networksurvey," Journal of Computer Networks, *vol. 52, no. 12, pp. 2292-2330,Aug. 2008.*

[6] K. Kinsella and D. R. Phillips, "Global aging: the challenge of success,"Population Bulletin, *vol. 60, 2005*.

[7] Tabulation on the 2010 population census of the people's republic ofChina, China Statistics, *May 2013, on-line.*

[8] S. R. Lord and J. Dayhew, "Visual risk factors for falls in older people,"Journal of American Geriatrics Society, *vol. 49, no. 5, pp. 508-515, Dec2001*.

[9] WHO, "The injury chart-book: a graphical overview of the globalburden of injury," Geneva: *WHO, pp. 43-50, 2012*.

[10] M. Mubashir, L. Shao, and L. Seed, "A survey on fall detection:Principles and approaches," Neurocomputing, *vol. 100, no. 16, pp. 144-152, Jan. 2013.*

[11] Q. Zhang, L. Ren, and W. Shi, "HONEY a multimodality fall detectionandtelecare system," Telemedicine and e-Health, *vol. 19, no. 5, pp. 415-429, Apr. 2013.*

[12] F. Bagalà, C. Becker, A. Cappello, L. Chiari, and K. Aminian,"Evaluation of accelerometer-based fall detection algorithm in realworldfalls," PLoS ONE, *vol. 7, no. 5, pp. 1-8, May 2012*.

[13] S. Abbate, M. Avvenuti, F. Bonatesta, G. Cola, P. Corsini, andA.Vecchio, "A smartphone-based fall detection system," Pervasive andMobile Computing, *vol. 8, no. 6, pp. 883-899, Dec. 2012.*

[14] S. Abbate, M. Avvenuti, G. Cola, P. Corsini, J.V. Light, and A.Vecchio,"Recognition of false alarms in fall detection systems," in Proc. 2011IEEE Consumer Communications and Networking Conference, LasVegas, USA, *pp. 23-28, Jan. 2011*.

[15] C. Rougier, J. Meunier, A.S. Arnaud, and J. Rousseau, "Robust videosurveillance for fall detection based on human shape deformation," IEEETrans.Circ. Syst. for Video Tech., *vol. 21, no. 5, pp. 611-622, May2011*.

[16]M. Popescu, Y. Li, M. Skubic, M. Rantz, "An Acoustic Fall DetectorSystem that Uses Sound Height Information to Reduce the False AlarmRate", in Proc. 30th Int. *IEEE Eng. in Medicine and Bio.Soc.Conference, pp. 4628-4631, Aug. 2008*.

[17] J. Winkley, P. Jiang, and W. Jiang, "Verity: An Ambient Assisted LivingPlatform," *IEEE Trans. Consumer* Electron., vol. 58, no. 2, pp. 364-373,May 2012.

[18] H.R. Yan, H.W. Huo, Y.Z. Xu, and M. Gidlund, "Wireless sensornetwork based E-health system: implementation and experimentalresults," IEEE Trans. Consumer Electron., vol. 56, no. 4, pp. 2288-2295, Nov. 2010.

[19] D.M. Karantonis, M.R. Narayanan, M. Mathie, "Implementation of areal-time human movement classifier using a triaxial accelerometer forambulatory monitoring," *IEEE Trans. Infor. Tech. Biom., vol. 10, no. 1,pp. 156-167, Jan. 2006.*

THE IMPACT OF FEATURE SELECTION ON PERFORMANCE IMPROVEMENT OF CLASSIFIERS IN DATA MINING

Vimalkumar B.Vaghela[1], Tejasvi D. Bhaskarwar[2]

[1]*Ph.D. Scholar, Computer Science & Engineering, Karpagam University, Coimbatore, Tamil Nadu, (India)*
[2]*PG. Scholar, Computer Science & Engineering, L. D. College of Engineering, Ahmedabad, Gujarat,(India)*

ABSTRACT

Feature Selection is an emerging topic in the field of Data Mining. The main objective of Feature selection is to select only useful features from the entire set of features. Advantage of Feature selection is, we can get smaller subset of features which gives the same or better result compared to the result we get by selecting all the features. Thus, it helps in reducing the number of attributes to be considered for Mining. If we consider Classification task then, in terms of classifier it improves accuracy, time and reduces the error rate. The paper covers the recent enhancements to the widely accepted algorithm for each ranking measure. It also highlights the challenges and applications for feature selection. We analyzed, compared Filter and Wrapper approaches and presented the results and conclusion.

Keywords: Classification, Data Mining, Filter, Feature selection, Wrapper

I INTRODUCTION

Feature selection is a field of interest for Researchers. There is a need to develop efficient algorithms for Feature selection. The main aim of the paper is to provide the complete understanding of Feature selection process along with different methods for performing it, recent progress in the standard algorithms for each ranking measure, the factors on which accuracy of classifier depends, the best method for performing Feature Selection. The paper also contains the possible Threshold values that can be used while performing Feature Selection. We have collected the results not only for Information weighting method but also for subset search and Wrapper using Naïve Bayesian and Decision Tree Classifier. The data sets used includes smaller and larger data sets. These data sets have nominal or continuous features. Previous work in this area had been there which had either covered only ranking measures or discussed algorithms long way back, whereas we have covered Filter approach and Wrapper including ranking measures and discussed the latest development in the standard algorithms.

The organization of paper is as follows:

Section 1 gives Introduction to Feature selection which includes the concepts of Data mining, Classification, Feature Selection Models. Section 2 discuses the different Frameworks available for Feature Selection. Section 3 covers different measures and standard algorithms or recent modification to it for each measure. Section 4 presents the Performance comparison for Filter and Wrapper model. Section 5 covers the Challenges in Feature

Selection. Section 6 covers Applications of Feature Selection for Classification. Section 7 is the Acknowledgement section. Section 8 puts forth the conclusion after analyzing the results.

1.1 Data Mining

Data mining deals with analyzing large set of data in order to get useful information from it. Data mining not only deals with the data stored in Data warehouse but also with data stored in various other repositories, Neural Network. It is broadly classified in to two types: Descriptive data mining and Predictive data mining. Descriptive data mining deals with analyzing historical data in order to determine its success or failure. E.g.:- Association rule mining. Predictive data mining includes analyzing the historical data in order to predict the future unseen data.eg:-Prediction, Classification.

1.2 Classification

It is a supervised learning technique in which a training set of data containing the class label is used for building a model or classifier. Then this classifier is tested on the testing data set to verify its accuracy. Now, this model can be used to classify the previously unseen data. There are various types of classifiers example Decision Tree, Neural Network, Naïve Bayesian Classifier and Classification Rules.

1.3 Feature selection

It is a dimensionality reduction technique. The complete set of features contains many attributes but only a few of them are sufficient and required for performing the data mining tasks successfully. There are mainly two models of Feature selection, Filter model and Wrapper model.

In Filter model characteristics of training data are used to perform attributes selection.eg: Entropy, distance. It does not use any learning algorithm. Filter model can be implemented in two ways, Feature weighting approach and Subset search method. In the first approach weights are assigned to individual features using some measures such as Information gain, Symmetric uncertainty, Distance, Consistency, Classifier error rate, Dependency. Then threshold value is calculated and all the attributes which are above certain threshold value are selected as relevant attributes but this method does not handle redundancy between the attributes ,as redundant attributes mostly have same weight or rank. In second approach, optimal subset of features is found out. Time complexity of subset search approach is high. Therefore, it is less suitable for High data sets.

An advantage of filter model is:

It is computationally cheaper than Wrapper model.

Drawback of Filter model is:It does not consider the effect of the selected features on the performance of induction algorithm and therefore it gives less accurate results than Wrapper model.

This model should be used when data sets contains many features or when processing time is the primary focus.

Input: $D(F_0, F_1, ..., F_{n-1})$ // a training data set with N features
S_0 // a subset from which to start the search
δ // a stopping criterion
Output: S_{best} // an optimal subset
01 begin
02 initialize: $S_{best} = S_0$;

```
        γbest = eval (S0, D, M); // evaluate S0 by an independent measure M
        do begin
        S = generate (D); // generate a subset for evaluation
        γ = eval(S, D, M); // evaluate the current subset S by M
                if (γ is better than γbest)
                γbest = γ;
                Sbest = S;
         end until (δ is reached);
        return Sbest;
end;
```

Fig.1: General Filter algorithm [1]

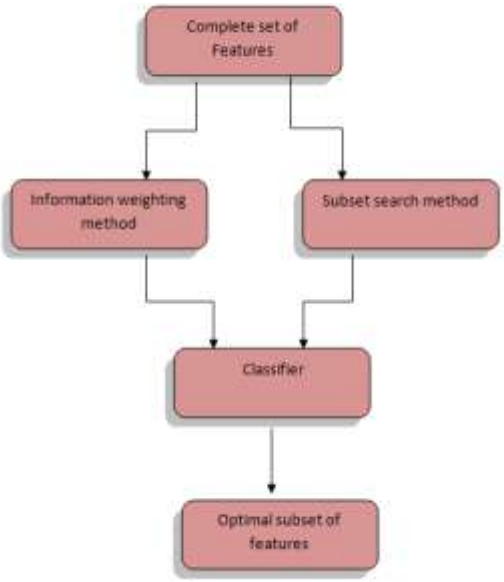

Fig.2: Filter Model

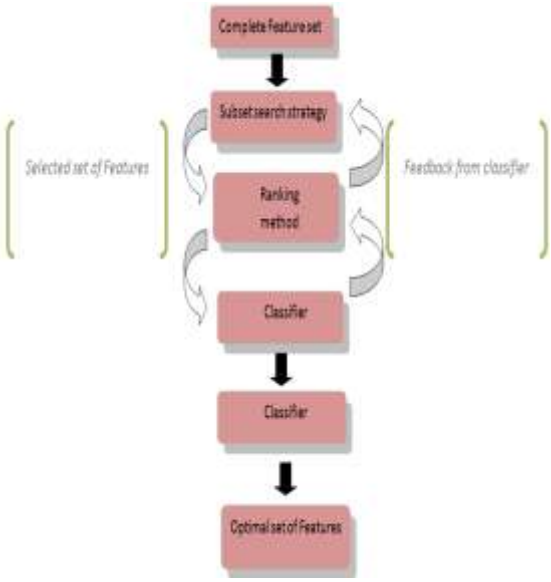

Fig.3: Wrapper Model

In Wrapper model, subset search method is used. The subset can be obtained from the above mentioned different strategies then this subset is given as an input to the Learning algorithm and if for a particular subset the performance of the algorithm improves then it is selected otherwise not.

Advantage of this model is, it gives accurate results than Filter model.

Disadvantage of this model is, it is costlier in terms of computation and hence, not suitable for large data sets.

This model should be used when data sets are of smaller size or when accuracy of the results is the primary focus.

Input: $D(F_0, F_1, ..., F_{n-1})$ // a training data set with N
S_0 // a subset from which to start the search
δ // a stopping criterion
Output: S_{best} // an optimal subset

```
begin
        initialize: Sbest = S0;
        γbest = eval (S0, D, A); // evaluate S0 by a mining algorithm A
        do begin
```

```
        S = generate (D); // generate a subset for evaluation
        γ = eval(S, D, A); // evaluate the current subset S by A
                if (γ is better than γbest)
                        γbest = γ;
                        Sbest = S;
         end until (δ is reached);
        return Sbest;
end;
```

Fig.4: General Wrapper algorithm [1]

A Hybrid model can be implemented by combining the Filter and Wrapper together. In this approach the Filter model provides a smaller subset compared to the entire subset and on this subset the Wrapper is applied.

Advantages:-It is faster than directly applying the Wrapper model on the complete set. It will give more accurate result than Filter model.

Disadvantages:-It will take more time than Filter model. The Wrapper model selects the exact set of Features but in Hybrid model it is possible that some important features are already lost by the Filter model those will not be considered in the Final subset. Therefore, it will give less accurate results than Filter model.

II FRAMEWORKS OF FEATURE SELECTION

2.1 Classical Framework

The Feature Selection process [2] using classical Framework is a four step process .i.e. Generation, Evaluation, Stopping criteria and Validation.

In the first step, a strategy for generating the subset is decided. The strategies can be exhaustive, heuristic or random search. In exhaustive search strategy all the possible subsets are generated. In Heuristic search Forward selection, backward elimination of the attributes can be done to form the subset .In Random subset generation strategy the attributes are randomly chosen.

To identify the attributes appropriate for performing the data mining task evaluation measures like Information, Dependency, Distance, Consistency, Classifier error rate are used.

The Features selection process continues until the stopping criterion is met. The stopping criteria can be getting an optimal subset of element is obtained, completion of particular number of iterations, getting a particular size subset or a defined condition is met. Finally, the results are validated.

This Framework can be used for Subset search approach.

2.2 TheNew Framework

The Features [3] are mainly categorized into four types:

Strongly Relevant Features, Weakly Relevant redundant Features, Weakly Relevant non-redundant Features, Irrelevant Features It is a 2 steps process, Relevance analysis followed by Redundancy analysis. Here, the first step will select only relevant features from the entire set of features. Relevant features include Strongly Relevant Features, Weakly relevant redundant Features and Weakly relevant non-redundant Features. The second step, will then remove the weakly relevant non-redundant features from it.

For Forming optimal subset strongly relevant features are necessarily required, weakly relevant features are optionally required. Irrelevant features are not at all required as they do not provide any information for performing the mining task. Therefore optimal subset can be formed by using

Optimal subset=All strongly relevant features + subset of weakly relevant features (No irrelevant features)

This subset of weakly relevant Feature is non-redundant weakly relevant features. The redundant weakly relevant features do not provide any additional information therefore they are not required. Therefore, to identify the useful subset of weakly relevant features redundancy analysis is required. This Framework can be used for Information weighting approach of Filter model.

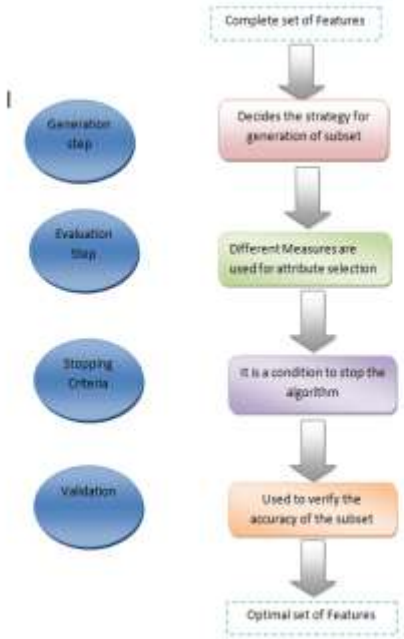

Fig.5: Classical Framework

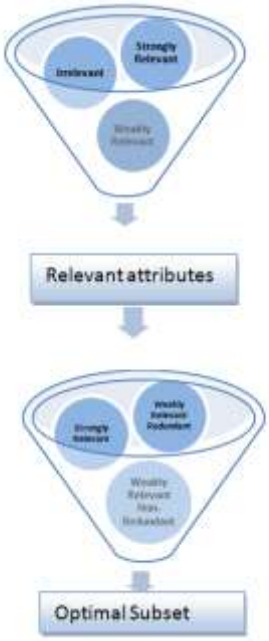

Fig.6: New Framework for Feature Selection

III EVALUATION MEASURES

3.1 Information Measure

To find the relevant attributes [4], [5], [13] Information gain can be used. Information Gain can be defined, using concept of entropy. Consider a variable X, which takes N values $\{S_i\}_{i=1toN}$. P (S_k) be the probability when $X=S_k$. Then the information obtained when $X= S_k$ is:

(1)

The entropy is a measure of unpredictability. It is the expectation of information. It is the probability of all the values that a variable can take. The entropy of X can be calculated as below:

$$E(X) = -\sum_{i=1}^{N} P(x_i) \log_2 P(x_i)$$

(2)

The Entropy of variable X after observing the value of Y can be calculated as below:

$$E(X|Y) = -\sum P(y_i) \quad (3)$$

Where (4)

If the observed values of X in the training data set S are partitioned according to the values of a second feature Y, and the entropy of X with respect to the partitions induced by Y is less than the entropy of X prior to partitioning, then there is a relationship between features X and Y. Given the entropy is a criterion of impurity in a training set S, we can define a measure reflecting additional information about X provided by Y that represents the amount by which the entropy of X decreases .This measure is known as Information Gain or Mutual Information. Below is the equation for calculating the Information gain.

(5)

mRMR [14] (Minimum Redundancy Maximal Relevance Feature Selection) is the latest algorithm based on Information gain measure. This algorithm uses Generation strategy as Forward subset selection strategy, Evaluation measure as mutual information between the attributes, stopping criteria as particular number of elements selected in the subset. i.e. the user defines the subset size.

mRMR [14] algorithm is as below:

```
Input myData (F1, F2….Fn, C),     //Contains all the features
Method,            // MI difference or MI Quotient i.e. the method to calculate temporary score
nFea               //Size of the subset defined by user
Output FeatInd   //Contains the index of the selected attributes
Begin
If (nFea< total_no_of_features)
poolFeatIndMax = nFea;
Else
poolFeatIndMax = total_no_of_features;
poolIndMask [FeatInd [0]] = 0; // 0th Feature is the class label     and mask value 0 indicates that do not consider
the Feature again
Flag=0;  //indicates that First Feature in FeatInd is yet to be selected
For k=1 to nFea do begin
For i=1 to poolFeatIndMax do begin
If poolIndMask [FeatInd[i]] == 0 // if the Feature is already      selected then skip the loop
Skip;
Relevance=Calculate Mutual Information for Fi w.r.t class;
For j=0 to k do begin // Calculate the redundancy of the attribute in hand with respect to all selected Features
Redundancy+= calculates the mutual information of Fi with respect to FeatInd[j];
End;
Divide the Redundancy by K;
If method==MID
        Do Begin
            Tempscore = Relevance - Redundancy;   //For Mutual difference
End Until method<>MID
If method==MIQ
        Do Begin
            Tempscore = RelevanceVal / (Redundancy+ 0.0001);        //For Mutual Quotient
End Until method<>MIQ
```

```
If Flag==0
Do begin
Set the Selected score as temporary score;
Set selected indicator as the current indicator
Set Flag=1;
                End until Flag==1
        Else
        If temporary score> selected score                  //To select the element with highest score
                Do Begin
Set the Selected score as temporary score;
Set selectedind as the current indicator
                End Until temporary score<=selected score
End;

End;
                feaInd [k] = selectedind;   //select the indicator of minimal redundant maximal relevant attribute
    poolIndMask [selectedind] = 0;                          //do not consider selected attribute again
End;
```

Fig.7: Minimum Redundancy Maximal Relevance Algorithm

In [4] modification to minimum Redundancy Maximal Relevance Algorithm has been proposed. Redundancy is non-symmetric whereas Information gain is symmetric therefore information gain can be replaced by gain ratio. The new approach showed better performance than earlier one.

Correlation Measure or Dependency Measure

Correlation based measures can be used to remove redundant features. E.g. of these measures are Pearson coefficient (classical linear correlation), Symmetric Uncertainty.

Pearson coefficient is applicable only when the attributes are linearly correlated. It's another limitation is: It cannot handle categorical data.

Symmetric Uncertainty : $SU(X,Y) = 2[(IG(X,Y))/(E(X)+E(Y))]$ (6)

Information gain [3] is biased towards attributes with more number of distinct values. So, it can be normalized using Symmetric uncertainty. The attributes should be more correlated to class and less correlated to each other. It normalizes the values in the range [0, 1]. A value of SU = 1 means one feature completely predicts the other, and SU = 0 indicates, that X and Y are independent. The correlation between an attribute and class label is known as C-correlation whereas the correlation between any two non-class attributes is called F-correlation.

FCBF Fast Correlation Based Filter removes the redundant attributes. It uses Symmetric Uncertainty as correlation based measure. The algorithm works as follows: The first attribute from the set of relevant attribute is selected and its C-correlation is calculated. This c-correlation is then compared with the F-correlation of the attribute in hand and remaining attributes. If the C-correlation is less than F-correlation i.e. the attributes is less relevant to class and more relevant to other attribute it means that the other attribute is the redundant one and therefore need to be removed. Same procedure is followed for all the attributes.

FCBF algorithm by YU and Liu

Input: S (F_1, F_2, …,F_N, C) // a training data set
δ // a predefined threshold
Output: S_{best} // a selected subset

```
begin
for i = 1 to N do begin
        calculate SU_{i,c} for F_i;
        if (SU_{i,c} > δ)
        append F_i to S_list ;
        end;
        order S_list in descending SU_{i,c} value;
        F_j = getFirstElement (S_list);
        do begin
          F_i = getNextElement (S_list, F_j);
            if (F_i <> NULL)
              do begin
                  if (SU_{i,j} _ SU_{i,c})
                     remove F_i from S_list ;
                  F_i = getNextElement (S_list, F_i);
              end until (F_i == NULL);
          F_j = getNextElement (S_list, F_j);
        end until (F_j == NULL);
  S_best = S_list;
end;
```

Fig.8: Fast Correlation Based Filter algorithm [3]

In [5], Yu and Liu they have applied FCBF with the threshold as and "0" and compared their results with other Filter based algorithms like ReliefF(Individual ranking) ,CFS-SF(sequential forward),FOCUS-SF(Subset selection method).They have used NBC and C4.5 to predict the accuracy of the algorithms. To discretize the dataset they have used MDL discretization. FCBF(log) can achieve similar or even higher accuracy compared with other algorithms. FCBF(log) results in significantly reduced accuracy than FCBF(0) due to high threshold value. They have suggested that when we do not have prior knowledge about data, we should set the Threshold value to 0 in FCBF algorithm.

A modification to FCBF algorithm is a [6] new algorithm FCBF# which uses a different subset search strategy. The algorithm works as follows: Unlike FCBF it compares C-correlation of the first element in the set with the F-correlation of first element with the last element. Then it continues to compare with the second last element and so on until it finds a redundant attribute. It stops the search for that attribute when a redundant attribute is found and same procedure is followed for the second attribute and so on. Once this is done for the entire attribute set it again starts comparing from the first element until no more redundant attributes are found. FCBF# for small data sets gives results equivalent to mRMR. This should be used when we want to select K size subset.

3.2 Distance/Divergence/Separability/Discriminaion Measure

In this measure the attribute that induces greater difference between the class conditional probabilities is given more priority over the others. Euclidean distance, Manhattan distance are the example of distance measures. Euclidean distance between the variables i and j can be computed as below:

$$d(i,j) = \sqrt{(x_{i1} - x_{j1})^2 + (x_i} \qquad (7)$$

Relief algorithm uses distance measure. It first assigns "0" value to all the Features. User provides number of samples which Relief should use. This below process is repeated number of sample times.

The [2] Relief algorithm then randomly or arbitrarily chooses an instance from the complete set of instances. It calculates the nearest hit by considering those instances which has minimum Euclidean distance and same class value as chosen instance. It calculates the nearest miss by considering those instances which has minimum Euclidean distance and different class value as compared to chosen instance. It uses the below formula to assign weights to the all the features, for j^{th} attribute:

$$W_j = W_j - \mathrm{diff}(x_j, \mathrm{nearHit}_j)^2 + \mathrm{diff}(x_j, \mathrm{nearMiss}_j)^2 \qquad (8)$$

Finally, The Feature above particular Threshold value is selected as relevant Features. This algorithm of has several drawbacks like it supports only Binary classes, user might difficulty in identifying the proper value for number of samples, it does not handle outliers. It [7] assumes that the nearest neighbors are defined in the original feature space which is highly unlikely to be the ones in the weighted space. In case, if many irrelevant features or mislabeled data is present then it might degrade Relief's performance severely.

Relief (D, S, NoSample, Threshold)

1. $T = \emptyset$
2. Initialize all weights, Wi , to 0
3. For i= 1 to NoSample //arbitrary chosen
4. Randomly choose an instance X in D
5. Find its nearestHit and nearestMiss
6. For j=1 to N
7. $W_j = W_j - \mathrm{diff}(x_j, \mathrm{nearHit}_j)^2 + \mathrm{diff}(x_j, \mathrm{nearMiss}_j)^2$
8. For j=1to N
9. If (Wj >=Threshold)
10. Append the Feature fj to T
11. Return T

Fig.9: Algorithm for Relief [2]

The latest algorithm based on Relief is the online I-Relief. The [7] online Iterative Relief can handle multiple classes, outliers and addresses the above issues. It is termed as iterative because it performs the feature weights estimation iteratively until a stopping criterion is met. It is online as it avoids the need to use the complete training data which makes it computationally faster. It gives significantly better results compared to Relief-F and Simba. I-Relief can identify useful feature efficiently than the Relief-F and Simba. It takes same processing time as Relief. Below is the algorithm for Online Iterative Relief:

1) **Initialization:** given $D = \{(x_n, y_n)\}_{n=1}^{N}$, set
   and , number of iterations T, Kernel width σ;
2) For t= 1:T
3) Randomly select a pattern x from D;
4) Calculate pair wise distances with respect to $w^{(t-1)}$
5) Calculate P_m , P_h, P_o

$$P_m(i|x_n, w) = \frac{f(\|x_n - x_i\|_w)}{\sum_{j \in M_n} f(\|x_n - x_i\|_w)} \quad (8)$$

// Probability of ith data point being a nearest miss of x_n

$$P_h(i|x_n, w) = \frac{f(\|x_n - x_i\|_w)}{\sum_{j \in H_n} f(\|x_n - x_i\|_w)} \quad , \forall i \in H_n \quad (9)$$

// Probability of ith data point being a nearest hit of x_n

$$P_o(o_n = 0|D, w) = \frac{\sum_{j \in M_n} f(\|x_n - x_i\|_w)}{\sum_{j \in H_n} f(\|x_n - x_i\|_w)} \quad , \forall i \in H_n \quad (10)$$

// Probability of ith data point being an outlier

Where $f(.)$ is a kernel function example:

$$f(d) = \exp\left(-d/\sigma\right) \quad (11)$$

and σ is a user defined value

Calculate $\pi(t)$

$$v^{(T)} = v^{(T-1)} + \vartheta^{(T)} \left(\xi^{(T)} \pi^{(T)} + \left(\frac{\xi^{(T)}}{\vartheta^{(T-1)}} - \frac{1}{\vartheta^{(T)}}\right) v^{(T-1)}\right) \quad (12)$$

Where $v^{(T)}$ is the estiation of feature weight

$\xi^{(T)}$ is the forgetting factor

$\vartheta^{(T)}$ is the normalization factor

6) Calculate $v^{(t)} = (1 - \eta^{(T)}) v^{(t-1)} + \eta^{(T)} \pi(t);$ (13)

7) Update $w^{(t)} = \left(v^{(t)}\right)^+ / \|(v^{(t)})^+\|_2 ;$ (14)

8) End

9) Output: $w^{(t)}$

Fig.10: Algorithm for Online Iterative Relief [7]

3.3 Consistency Measure

If two tuples contain similar data but they belong to different classes then they leads to inconsistency. If the two tuples are exactly similar and they belong to same class then they leads to consistency.

Las Vegas Filter [2][8] algorithm uses consistency measure. It uses random subset generation strategy. It calculates the inconsistency rate of subset and if it is greater than zero then that subset is rejected. It searches only those subsets which are smaller or equal in size. This process is repeated MAX_TRIES times which has value in general 100. Its accuracy is good but takes more time than heuristic search.

Input:

D- Data described by X, |X|=n

n- Number of attributes

γ-Allowable inconsistency rate

Output:

Set of m features satisfying the inconsistency

```
    C_best=n
For i=1 to MAX_TRIES
        S= randomSet (seed);
        C= numOfFeatures (X');
    If(C< C_best) and (InconCheck (S, D)< γ)
```

```
                S_best = S; C_best=C;
                Print_current_best (Best);
        Else If(C= C_best) and (InconCheck (X', S_0)< γ)        Print _current_best (Best);
         End If
    End For
```

Fig.11 Las Vegas Filter algorithm [9]

Enhanced [9] Las Vegas algorithm is the modification to the standard Las Vegas algorithm. The new algorithm uses concept of sampling for increasing the speed of the algorithm. Some percentage of the complete data set is taken as Training data. Now, from the training data the best subset is obtained using the same method as in LVF. This process is repeated a K time which is decided by the user i.e. k times the samples are selected. The best subset obtained from each sample set is compared with the previous best subset to give the final result. The new algorithm selects the almost same number of attributes as the LVF algorithm but ELV is comparatively faster. Below is the algorithm for it:

Input:

D- Data described by X, |X|=n
n- Number of attributes
γ-Allowable inconsistency rate
K- Number of samples
p- Sample percentage
Best-Set of current best features
C_{best}-Number of features in best
MAX_TRIES: Number of iterations of each sample

Output:

Set of m features satisfying the inconsistency criterion (m<n)

```
For j=1 to K
    S_0=draw sample of size p% from D
    C_best=n, seed=X;
    For i=1 to MAX_TRIES
            X'= randomSet (seed);
            C= numOfFeatures (X');
            If(C< C_best) and (InconCheck (X', S_0)< γ)
                    Best= X'; C_best=C;
                    Print_current_best (Best);
            End If
    End For
If (j==1)
S_1=Best;
Incon = InconCheck (Best, S_0);
C_1= C_best;
Else if (InconCheck (Best, S_0) < Incon) and C_best<= C_1
S_1=Best;
C_1= C_best;
Incon = InconCheck (Best, S_0);
End if
End For
```

Fig.12: Enhanced Las Vegas Filter algorithm [9]

3.4 Error rate Measure

It is used in Wrapper model. The classifiers are used to rank the Features. This approach gives accurate result but it is time consuming. Therefore, it is not suitable for high dimensional data. The latest Wrapper algorithm is the Harmony Search based 1-Nearest neighbor classifier. The [10] way music searches for the state of harmony the harmony search looks for the optimality. It repeatedly searches for harmony and performs pitch adjustments until a state of harmony is achieved. It outperforms the algorithms like Genetic algorithm and Particle Swarm Optimization. HS-1-NN is faster than other algorithms. Below is the algorithm for it:

HMCR: Harmony Memory Considering Rate,

PAR: Pitch Adjustment Rate

1) Randomly initialize the harmony memory with initial set of solutions (Harmony Vectors, HV) with normalized values from the original data set
   Evaluate the accuracy of each solution by calling 1-NN (HVi) //where i<=Harmony Memory Size
2) Improvise a new harmony: define a selected subset of features
   For i=1 to D do (where D represents dimensions of the data set)
   If (rand> HMCR)
   Begin
   Randomly select a Harmony from HM, $NewH_i$
   If (rand>PAR)
   Adjust the $NewH_i$ within limit
   End If

   End Begin
   Else
   $NewH_i$=RSV //Randomly selected value from HM
   End If
   Next-for
   ACC_NewHV=1-NN (NewHV)
   //The New Harmony vector replaces the worst in the memory and w is the index of the worst Harmony
3) Update the Harmony Memory
   If ACC_NewHV>ACC_HV_w
   HV_w=NewHV
4) Check the stopping criteria //If the number of improvisation is satisfied then iteration is terminated otherwise repeat steps 2 and 3
5) Select the best Harmony in HM: find the best Harmony HV_B
   ACC_HV_B=1-NN (HV_B)// classification accuracy
6) Return the best Harmony in the Harmony Memory as the feature subset along with the Accuracy value

Fig.13: Harmony Search based Wrapper Feature Selection method for 1-NN classifier [10]

IV PERFORMANCE COMPARISON AND ANALYSIS

We have use 4 data sets and compare their performance using the two well-known classifiers Naïve Bayesian and Decision tree on WEKA to verify the accuracy of the results with feature selection and without feature selection. We have given the results for subset search method and Information ranking method of Filter model and used measures like correlation, Information gain measure, distance, error. For error based measure we have

used numToselect option while for other measures we have used Threshold value as 0.1. For continuous data sets we have used Equal Frequency discretization method. While implementing the Wrapper model we used Best First search strategy and changed the classifier to Naïve Bates or J48.

Table.1: Feature Set using Subset search method

Dataset	Effect of Feature Selection	
	Full set of Features	No. of Features after Feature Selection Process
Mushroom	23	5
Promoters	59	6
Sonar	61	13
Splice	62	23
Average	**51.25**	**11.75**

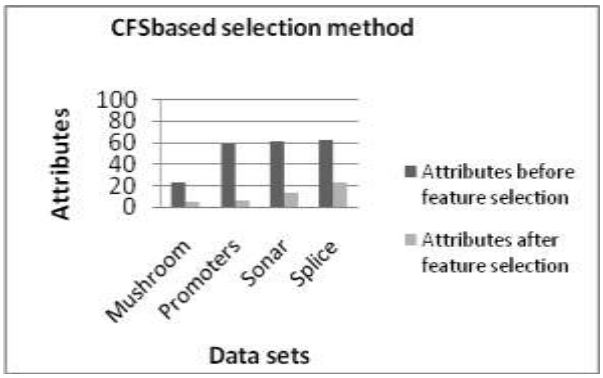

Fig.14: Feature set using Subset Search method

Table.2 Accuracy of Naïve Bayesian classifier using Subset Search method

Dataset	Naïve Bayesian as a classifier (Accuracy %)	
	Full Set of Features	After Feature Selection
Mushroom	95.34	98.56
Promoters	89.62	92.45
Sonar	76.81	79.223
Splice	95.30	96.14
Average	**89.27**	**91.60**

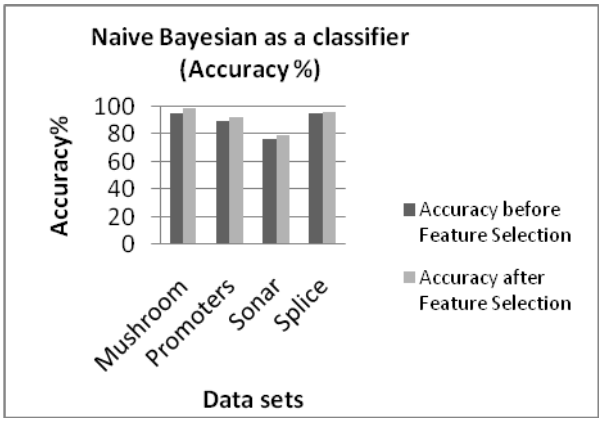

Fig.15: Accuracy of Naïve Bayesian classifier using Subset Search method

Table.3: Accuracy Decision Tree classifier using Subset Search method

Dataset	Decision Tree as a classifier (Accuracy %)	
	Full Set of Features	After Feature Selection
Mushroom	98.98	99.03
Promoters	75.47	77.36
Sonar	73.43	74.88
Splice	94.08	94.49
Average	**85.49**	**86.44**

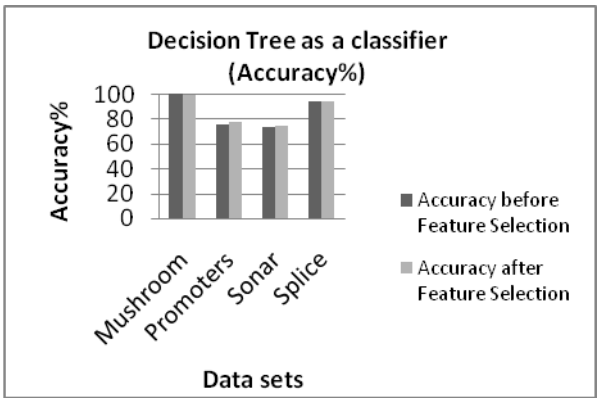

Fig.16: Accuracy Decision Tree classifier using Subset Search method

Table.4: Feature Set using Correlation based measure

Dataset	Effect of Feature Selection	
	Full set of Features	No. of Features after Feature Selection Process
Mushroom	23	20
Promoters	59	33
Sonar	61	38
Splice	62	14
Average	**51.25**	**26.25**

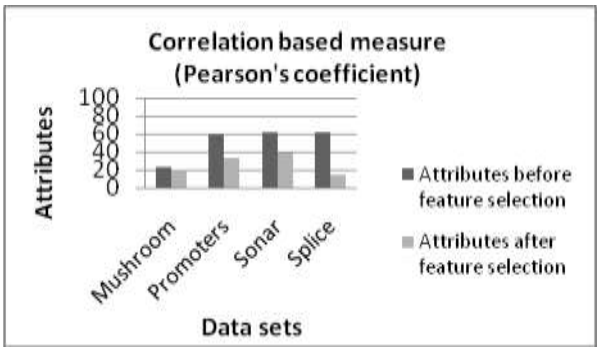

Fig.17: Feature set using Correlation based measure

Table.5: Accuracy of Naïve Bayesian classifier using Correlation measure

Dataset	Naïve Bayesian as a classifier (Accuracy %)	
	Full Set of Features	After Feature Selection
Mushroom	95.33	95.48
Promoters	89.62	89.62
Sonar	76.81	76.81
Splice	95.29	94.51
Average	**89.26**	**89.10**

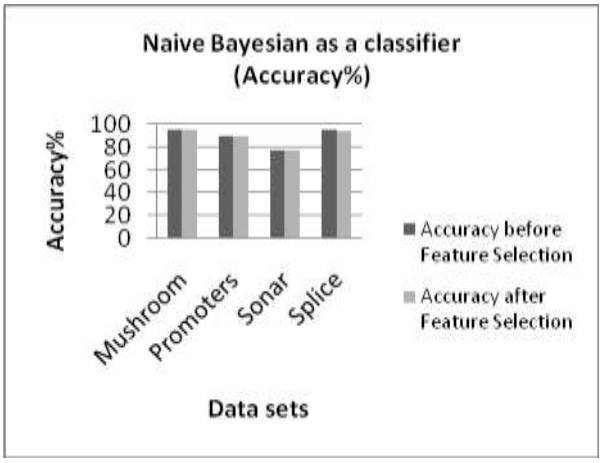

Fig.18: Accuracy of Naïve Bayesian classifier using Correlation measure

Table.6: Accuracy Decision Tree classifier using Correlation measure

Dataset	Decision Tree as a classifier (Accuracy %)	
	Full Set of Features	After Feature Selection
Mushroom	99.98	99.98
Promoters	75.47	77.35
Sonar	73.43	73.43
Splice	94.07	95.07
Average	**85.74**	**86.46**

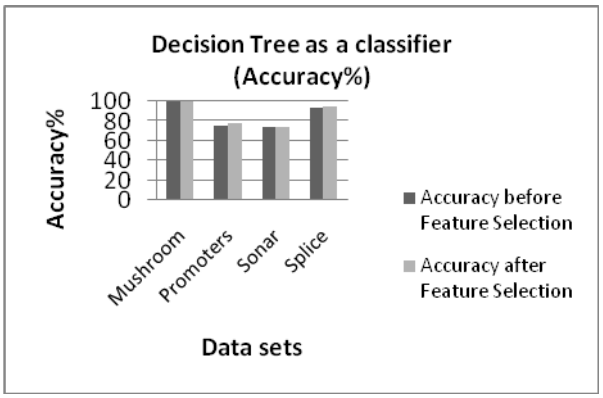

Fig .19: Accuracy of Decision Tree classifier using Correlation measure

Table.7: Feature Set using Information gain based measure

Dataset	Effect of Feature Selection	
	Full set of Features	No. of Features after Feature Selection Process
Mushroom	23	14
Promoters	59	13
Sonar	61	7
Splice	62	11
Average	51.25	11.25

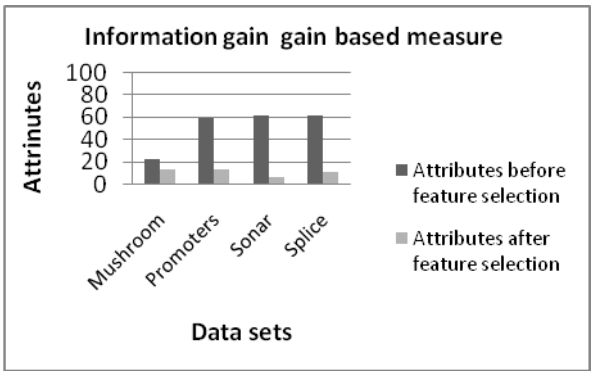

Fig.20: Feature set using Information gain based measure

Table.8: Accuracy of Naïve Bayesian classifier using Information gain measure

Dataset	Naïve Bayesian as a classifier (Accuracy %)	
	Full Set of Features	After Feature Selection
Mushroom	95.33	95.56
Promoters	89.62	93.39
Sonar	76.81	75.84
Splice	95.29	93.69
Average	**89.26**	**89.62**

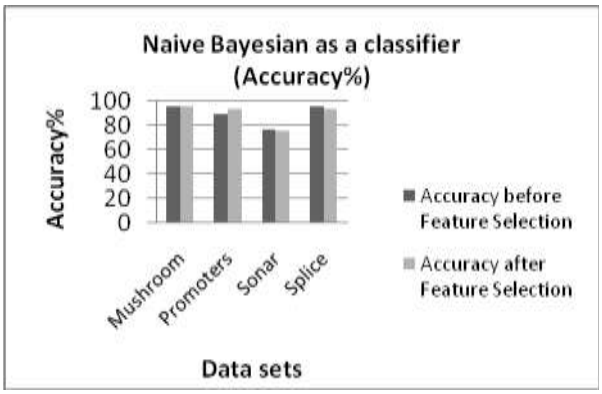

Fig.21: Accuracy of Naïve Bayesian classifier using Information gain measure

Table.9: Accuracy Decision Tree classifier using Information gain measure

Dataset	Decision Tree as a classifier (Accuracy %)	
	Full Set of Features	After Feature Selection
Mushroom	99.98	99.98
Promoters	75.47	75.47
Sonar	73.43	76.32
Splice	94.07	93.85
Average	**85.74**	**86.41**

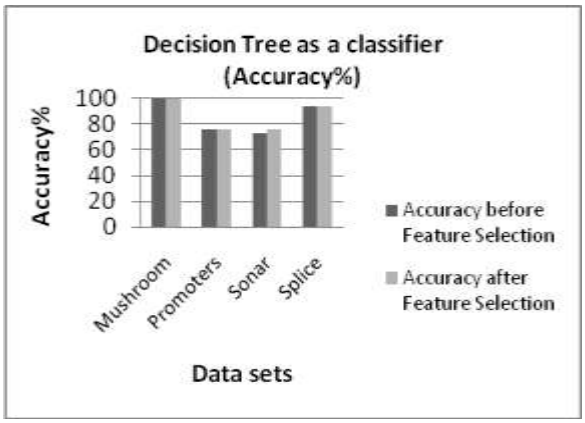

Fig.22: Accuracy Decision Tree classifier using Information gain measure

Table.10: Feature Set using Distance based measure

Dataset	Effect of Feature Selection	
	Full set of Features	No. of Features after Feature Selection Process
Mushroom	23	18
Promoters	59	10
Sonar	61	13
Splice	62	9
Average	**51.25**	**12.5**

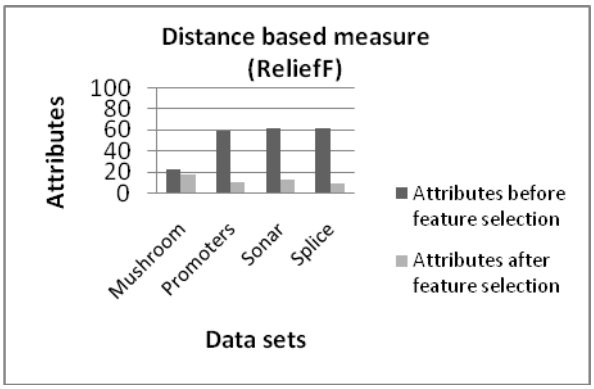

Fig.23: Feature set using Distance based measure

Table.11: Accuracy of Naïve Bayesian classifier using Distance measure

Dataset	Naïve Bayesian as a classifier (Accuracy %)	
	Full Set of Features	After Feature Selection
Mushroom	95.33	95.41
Promoters	89.62	89.62
Sonar	76.81	79.71
Splice	95.29	94.16
Average	**89.26**	**89.72**

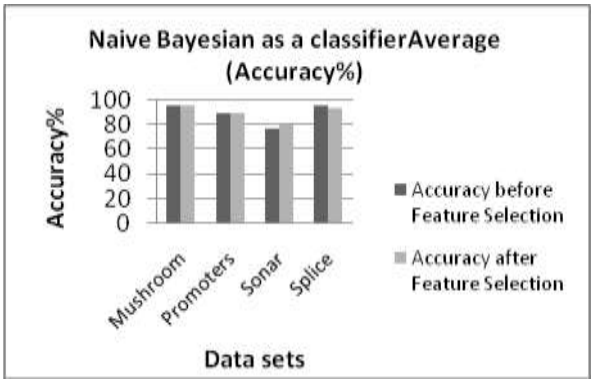

Fig.24: Accuracy of Naïve Bayesian classifier using Distance measure

Table.12: Accuracy Decision Tree classifier using Distance measure

Dataset	Decision Tree as a classifier (Accuracy %)	
	Full Set of Features	After Feature Selection
Mushroom	99.98	99.98
Promoters	75.47	76.41
Sonar	73.43	75.36
Splice	94.07	94.01
Average	**85.74**	**86.44**

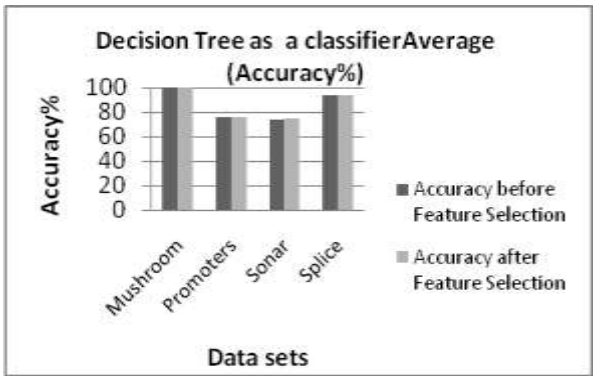

Fig.25: Accuracy Decision Tree classifier using Distance measure

Table.13: Feature Set using Error based measure

Dataset	Effect of Feature Selection	
	Full set of Features	No. of Features after Feature Selection Process
Mushroom	23	15
Promoters	59	13
Sonar	61	14
Splice	62	16
Average	**51.25**	**14.5**

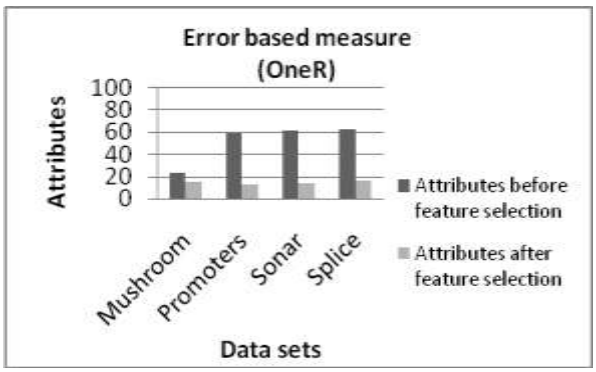

Fig.26: Feature set using Error based measure

Table.14: Accuracy of Naïve Bayesian classifier using Error measure

Dataset	Naïve Bayesian as a classifier (Accuracy %)	
	Full Set of Features	After Feature Selection
Mushroom	95.33	95.50
Promoters	89.62	93.39
Sonar	76.81	78.74
Splice	95.29	94.70
Average	**89.26**	**90.58**

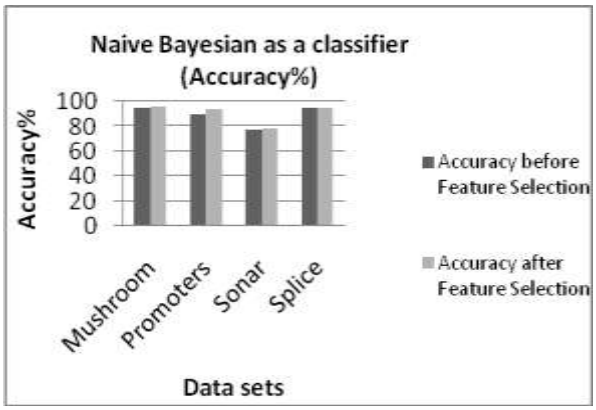

Fig.27 Accuracy of Naïve Bayesian classifier using Error measure

Table.15: Accuracy Decision Tree classifier using Error measure

Dataset	Decision Tree as a classifier (Accuracy %)	
	Full Set of Features	After Feature Selection
Mushroom	99.98	99.98
Promoters	75.47	76.41
Sonar	73.43	74.39
Splice	94.07	94.67
Average	**85.74**	**86.36**

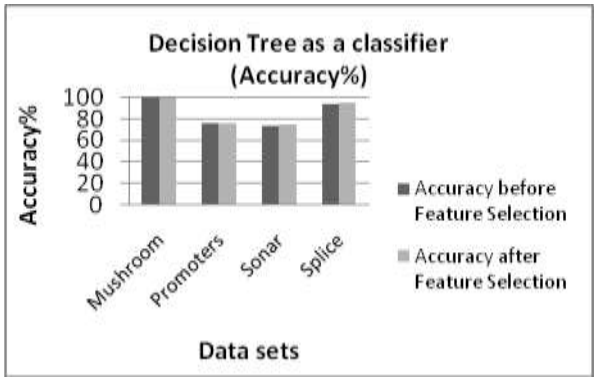

Fig.28: Accuracy Decision Tree classifier using Distance measure

Table.16: Feature Set using Wrapper model for Naïve Bayesian as a classifier

Dataset	Effect of Feature Selection	
	Full set of Features	No. of Features after Feature Selection Process
Mushroom	23	4
Promoters	59	8
Sonar	61	5
Splice	62	22
Average	**51.25**	**9.75**

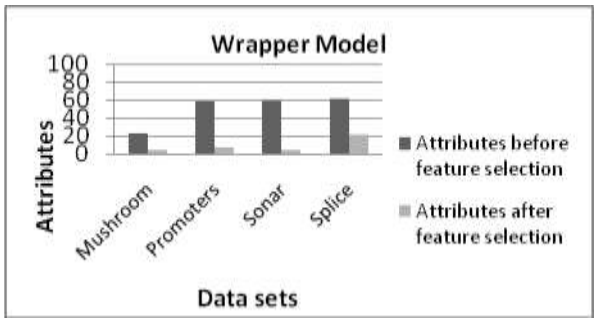

Fig.29: Feature Set using Wrapper model for Naïve Bayesian as a classifier

Table.17: Accuracy of Naïve Bayesian classifier using Wrapper model

Dataset	Naïve Bayesian as a classifier (Accuracy %)	
	Full Set of Features	After Feature Selection
Mushroom	95.33	99.70
Promoters	89.62	96.22
Sonar	76.81	80.67
Splice	95.29	96.17
Average	**89.26**	**93.19**

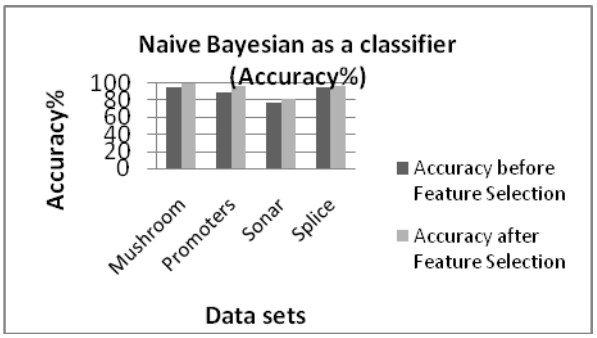

Fig.30: Accuracy of Naïve Bayesian classifier using Error measure

Table.18 Feature Set using Wrapper model for Decision Tree Classifier

Dataset	Effect of Feature Selection	
	Full set of Features	No. of Features after Feature Selection Process
Mushroom	23	5
Promoters	59	4
Sonar	61	5
Splice	62	16
Average	**51.25**	**7.5**

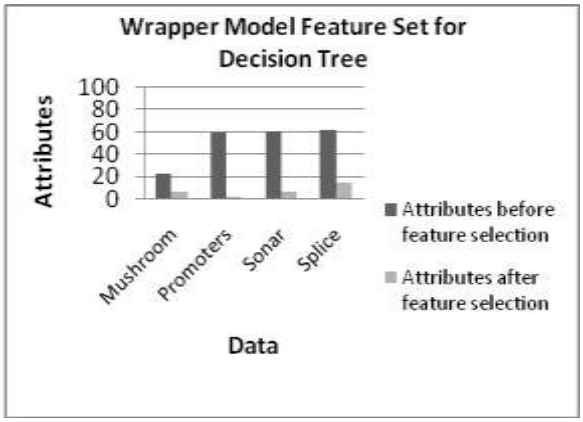

Fig.31: Feature Set using Wrapper model for Decision Tree Classifier

Table.19: Accuracy of Decision Tree classifier using Wrapper model

Dataset	Decision Tree as a classifier (Accuracy %)	
	Full Set of Features	After Feature Selection
Mushroom	99.98	99.98
Promoters	75.47	79.24
Sonar	73.43	81.64
Splice	94.07	94.92
Average	**85.74**	**88.94**

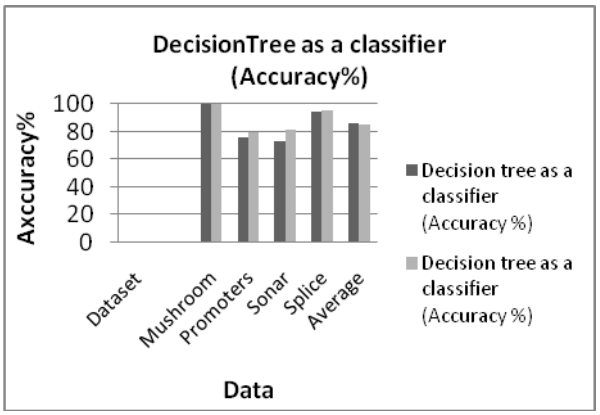

Fig.32: Accuracy of Decision Tree classifier using Wrapper model

Table.20: Accuracy Comparison of Naïve Bayesian and Decision Tree classifiers

Method	Naïve Bayesian	Decision Tree
Subset search	91.59	86.43
Correlation measure	89.10	86.46
Information gain	89.62	86.41
Distance	89.72	86.44
Error	90.58	86.36
Wrapper	93.19	88.94

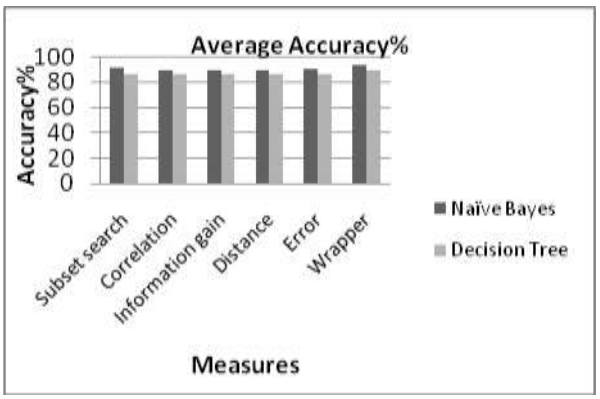

Fig. 33: Accuracy of Naïve Bayesian and Decision Tree classifiers

After performing above experiment we found that the Wrapper model finds the best subset for a given classifier but it takes noticeable amount of time to find the subset compared to Filter model. Therefore, it is preferable in case of smaller data sets. Also, the result of subset search method depends on the classifier.

For [11] all ranking measures the result depends on the classifier and data set. The accuracy of classifier depends on data set, Threshold value, discretization method and how missing values are handled.

Feature selection the Threshold value plays an important role. The commonly used Threshold values are 0, 0.1, mean, mean + standard deviation, mean + 0.3 * standard deviation, mean + 0.6 * standard deviation, .

V CHALLENGES OF FEATURE SELECTION

1) Feature selection for Multi Relational Data :-

   In Multi Relational data sets, the class label information is available in single Target table whereas to perform the mining operation data needs to be collected from all the tables. Therefore, selecting features for such data sets is a challenging task.

2) Handling Large data sets:

   a. Selecting features from huge data sets, maintaining accuracy and time complexity is a big challenge.

   b. Visiting huge data sets again and again might increase the cost of Feature selection

3) Feature selection algorithms which take user input like subset size in case of mRMR for such algorithms deciding the exact value for getting accurate results is a challenge.

   a. Handling different types of data is a challenge

4) Feature selection for sparse data:-Data containing many missing values is called Sparse data. In Market basket analysis, video streaming, web data contains various missing values. Selecting features from such kind of data is a challenge.

5) Modifying traditional algorithms in order avoid multiple database scans

VI APPLICATIONS OF FEATURE SELECTION

1) Text categorization:-It is used to categorize the text document to the predetermined categories. Example:- whether an email is a spam or not.

2) Intrusion Detection system:-Many packets arrive to a computer system, so based on the important features classifier can be trained to determine whether an intrusion has occurred or not. They it can be used to detect the intrusion on unseen data.
3) Medical data:-To predict whether patient is suffering from particular disease or not. Feature selection can be applied for building classification model for medical data.
4) Financial systems:-Feature selection plays vital role in determining fraud loan applicants.
5) Molecular Biology:-Molecule contains various atoms resulting in huge feature space. Therefore, Feature selection can be helpful for reducing the subspace in classifying the molecule accurately. Example:-It can be used in determining whether a molecule belongs to the cancerous class or not.

VII CONCLUSION AND FUTURE WORK

Our Experiments clearly shows that, the Feature Selection improves the classifiers accuracy and the Wrapper model gives best results but the results are specific to the classifier. Also, it took more processing time while implementing wrapper compared to other models. So, it can be used for smaller data sets. If the data sets are of larger size then Filter model can be used. The subset of Features obtained using the Filter model is same for all classifiers. While applying the Filter model the algorithms discussed in the paper can be applied and whichever gives the best results for the selected data set and classifier can be selected. The future work can be done to address the challenges mentioned in the paper.

REFERENCES

[1] Liu, Huan, and Lei Yu. "Toward integrating feature selection algorithms for classification and clustering*." Knowledge and Data Engineering, IEEE Transactions on 17.4 (2005): 491-502.*

[2] Dash, Manoranjan, and Huan Liu. "Feature selection for classification." *Intelligent data analysis 1.3 (1997): 131-156.*

[3] Yu, Lei, and Huan Liu. "Efficient feature selection via analysis of relevance and redundancy." *The Journal of Machine Learning Research* 5 (2004): 1205-1224.

[4] Ponsa, Daniel, and Antonio López. "Feature selection based on a new formulation of the minimal-redundancy-maximal-relevance criterion." Pattern Recognition and Image Analysis. Springer Berlin Heidelberg, 2007. 47-54

[5] Vaghela, V. B., Amit Ganatra, and Amit Thakkar. "Boost a weak learner to a strong learner using ensemble system approach." *Advance Computing Conference, 2009. IACC 2009. IEEE International*. IEEE, 2009.

[6] Danubianu, Mirela, Stefan-Gheorghe Pentiuc, and Dragos Mircea Danubianu. "Data Dimensionality Reduction for Data Mining: A Combined Filter-Wrapper Framework." (2006).

[7] Senliol, Baris, et al. "Fast Correlation Based Filter (FCBF) with a different search strategy." *International Symposium on Computer and Information Sciences (ISCIS 2008)*. 2008

[8] Vimalkumar B. Vaghela, Dr. Kalpesh H. Vandra, Dr. Nilesh K. Modi, *"Multi-Relational Classification Using Inductive Logic Programming"*, International Journal of Engineering Research & Technology (IJERT) Vol. 1 Issue 3, May - 2012 ISSN: 2278-0181.

[9] Sun, Yijun. "Iterative RELIEF for feature weighting: algorithms, theories, and applications." *Pattern Analysis and Machine Intelligence, IEEE Transactions on 29.6 (2007): 1035-1051.*

[10] Vimalkumar B. Vaghela, Kalpesh H. Vandra, Nilesh K. Modi, *"Analysis and Comparative Study of Classifiers for Relational Data Mining"*, International Journal of Computer Applications (0975 – 8887) Volume 55– No.7, October 2012.

[11] Dash, Manoranjan, Huan Liu, and Hiroshi Motoda. "Consistency based feature selection." *Knowledge Discovery and Data Mining. Current Issues and New Applications. Springer Berlin Heidelberg, 2000. 98-109.*

[12] Vaghela, Vimalkumar Bhupatbhai. "MR2 Based Feature Selection for Multi-Relational Naïve Bayesian Classifier." *International Journal of Applied Research in Computer Science and Information Technology* 2.1 (2013).

[13] Nandi, Gypsy. "An enhanced approach to Las Vegas Filter (LVF) feature selection algorithm." *Emerging Trends and Applications in Computer Science (NCETACS), 2011 2nd National Conference on. IEEE, 2011.*

[14] Vaghela, Vimalkumar B., Kalpesh H. Vandra, and Nilesh K. Modi. "MR-MNBC: MaxRel based feature selection for the multi-relational Naïve Bayesian Classifier." *Engineering (NUiCONE), 2013 Nirma University International Conference on*. IEEE, 2013.

[15] Krishnaveni, V., and G. Arumugam. "Harmony search based wrapper feature selection method for 1-nearest neighbour classifier." *Pattern Recognition, Informatics and Mobile Engineering (PRIME), 2013 International Conference on. IEEE, 2013.*

[16] Vaghela, V. B., K. H. Vandra, and N. K. Modi. "Information Theory Based Feature Selection for Multi-Relational Naïve Bayesian Classifier." *J Data Mining Genomics Proteomics* 5.155 (2014): 2153-0602.

[17] Novaković, Jasmina, Perica ŠTRBAC, and Dušan Bulatović. "Toward optimal feature selection using ranking methods and classification algorithms." *Yugoslav Journal of Operations Research ISSN: 0354-0243 EISSN: 2334-6043* 21.1 (2011).

[18] Vaghela, Vimalkumar B., Kalpesh H. Vandra, and Nilesh K. Modi. "Entropy Theory Based Feature Selection for Multi-Relational Naïve Bayesian Classifier." *Journal of International Technology and Information Management (JITIM) (1543-5962) 13-26 Volume 23, Number 1, 2014.*

[19] Jain, Anil, and Douglas Zongker. "Feature selection: Evaluation, application, and small sample performance." *Pattern Analysis and Machine Intelligence, IEEE Transactions on* 19.2 (1997): 153-158.

[20] Liu, Huan, et al. "Feature Selection: An Ever Evolving Frontier in Data Mining." *FSDM*. 2010.

[21] Yu, Lei, and Huan Liu. "Efficient feature selection via analysis of relevance and redundancy." *The Journal of Machine Learning Research* 5 (2004): 1205-1224.

[22] Kim, YeongSeog, W. Nick Street, and Filippo Menczer. "Feature selection in unsupervised learning via evolutionary search." *Proceedings of the sixth ACM SIGKDD international conference on Knowledge discovery and data mining*. ACM, 2000.

[23] Dash, Manoranjan, and Huan Liu. "Feature selection for clustering." *Knowledge Discovery and Data Mining. Current Issues and New Applications*. Springer Berlin Heidelberg, 2000. 110-121.

[24] Han, Jiawei, and Micheline Kamber. *Data Mining, Southeast Asia Edition: Concepts and Techniques.* Morgan kaufmann, 2006.

[25] Y. Tadeuchi, R. Oshima, K. Nishida, K. Yamauchi, and T. Omari (2007), "Quick Online feature selection method for regression - A feature selection method inspired by human behavior," *Proceeding of the IEEE International Conference on Systems, Man and Cybernetics*, Canada, October 2007.

[26] Mierswa, Ingo, et al. "Yale: Rapid prototyping for complex data mining tasks." Proceedings of the 12th ACM SIGKDD international conference on Knowledge discovery and data mining. ACM, 2006.

[27] A. Ouardighi, A. Akadi, and D. Aboutajdine (2007), "Feature Selection on Supervised Classification Using Wilk's Lambda Statistic," *Proceeding of 2007 Computational Intelligence and Intelligent Informatics (ISCIII'07)*, pp. 51~55, March 2007.

ABOUT AUTHORS

First Author: Vimalkumar B. Vaghela, is an Assistant Professor in Department of Computer Engineering at L. D. College of Engineering, Ahmedabad, Gujarat. He is currently pursuing Ph.D. in Data Mining. He has published more than 20 research papers in international journals and conferences. He had written & published books titled "Ensemble Classifier in Data Mining" and "Operating System". He has more than 10 years of teaching experience; his biography was included in Who's Who Science & Engineering Directory 2010-11, 2013 and in American Biographical Institute in 2011.

Second Author: Tejasvi Dilip Bhaskarwar completed B.E in Computers from MIT College of Engineering, Pune, Maharashtra. She Worked with Cognizant Technology Solutions for 2.5 years during Cognizant she received 3 awards as Diamond in the Rough award, Cognizant batch Topper award, Award from client for showing outstanding performance and dedication towards the client engagement at Cognizant, also entitled as Process Champion in the project. Currently doing M.E in Computer Science and Engineering in L.D College of Engineering, Ahmedabad, Gujarat, India

ENERGY EFFICIENT ROUTING VIA HIERARCHICAL CLUSTERS FOR WIRELESS SENSOR NETWORK USING HARMONY SEARCH OPTIMIZATION

M. Mathivathani[1] , R. Karpaga Priya[2]

[1,2] PG Scholar, Raja College of Engineering and Technology, Madurai, Tamilnadu, (India)

.

ABSTRACT

In Wireless sensor networks are composed to a large number of nodes, which have capability to sensing, transmitting and receiving information by using battery. This sensor nodes work together to deliver information gathered from terrain to a sink. The nodes existing in terrain one or more hop distance from the sink. A sensing packet from distanced nodes to reach the sink consumes more power, proportion to number of forwarder nodes. More power consumption drain out battery power early and leads disruption information passing from nodes to sink. The efficient use of battery power source in the sensor node is most desirable option for prolong to life time of wireless sensor network. The sensor nodes are clustered into number of groups based on power consumption minimization and each group has a cluster head (CH) as representative of the group. In this paper, we propose and implement the role of CH. It receives sensing packet and forwards via neighbor CH to reach sink. The optimal number of groups and its cluster head selection carried out Harmony search algorithm.

Keywords: Cluster Head, Harmony Serach Algorithm.

I INTRODUCTION

Wireless sensor network of spatially distributed autonomous sensors to monitor physical or environmental conditions, such as temperature, sound pressure, etc. and to cooperatively pass their data through the network to a main location. The more modern networks are bi-directional, also enabling control of sensor activity. In terms of routing protocol, there are two different solutions from existing works. One is flat routing, each sensor node plays the same role and sends their data to sink node directly which always results in excessive data redundancy and faster energy consumption. Another is Cluster-based routing protocols are well-known techniques that enable the operation of WSNs to be highly energy-efficient. The basic principle of a cluster-based protocol is to organize the sensor nodes into groups called clusters. In each cluster, a node is selected as the cluster head (CH) that has the responsibility to collect data from other cluster members, aggregate, and forward the compact information to a base station (BS). By using this principle, it is able to reduce the amount of data transferred within the network, thus energy saving is achieved. A centralized cluster-based protocol using harmony search algorithm (HSA), a music

based meta heuristic optimization method, has been proposed in that considers both energy efficiency and minimized intra-cluster mean distances in the setup phase to obtain the optimal cluster formation and selection of the CHs.

II RELATED WORK

The energy model may deviate from the actual node battery level due to inaccuracy in the model or packet drop caused by either a communication error or a buffer overflow at a node. This deviation may negatively affect the quality of the routing decisions. To compensate for this deviation, the nodes refresh their energy model at the gateway periodically with a low frequency. All nodes, including inactive nodes, send their refresh packets at a pre - specified time directly to the gateway and then turn their receivers on at a predetermined time in order to hear the gateway routing decision.

III PROPOSED SYSTEM

The proposed system equipped the main target of hierarchical routing or cluster based routing is to efficiently maintain the energy usage of sensor nodes by involving them in multi-hop communication within a particular cluster. Cluster formation is generally based on the energy reserve of sensors and sensors proximity to the Cluster Head (CHs). Clustering plays an important role for energy saving in WSNs. With clustering in WSNs, energy consumption, lifetime of the network and scalability can be improved. Because only cluster head node per cluster is required to perform routing task and the other sensor nodes just forward their data to cluster head. Clustering has important applications in high-density sensor networks, because it is much easier to manage a set of cluster representatives (cluster head) from each cluster than to manage whole sensor nodes. In WSNs the sensor nodes are resource constrained which means they have limited energy, transmit power, memory, and computational capabilities. Energy consumed by the sensor nodes for communicating data from sensor nodes to the base station is the crucial cause of energy depletion in sensor nodes. WSN sensor nodes have limited processing power, communication bandwidth, and storage space. This gives rise to new and unique challenges in data management and information processing. In-network data processing techniques, such as data aggregation, multicast and broadcast need to be developed. Network lifetime is the key characteristics used for evaluating the performance of any sensor network. A lifetime of the network is determined by residual energy of the system, hence main and most important challenge in WSN is the efficient use of energy resources. Literature shows the energy efficiency is introduced in WSNs using any of the following mechanisms: Energy conservation mechanism, Power conservation mechanism, Energy harvesting mechanism and Energy efficient routing.

IV BLOCK DIAGRAM AND ITS DESCRIPTION

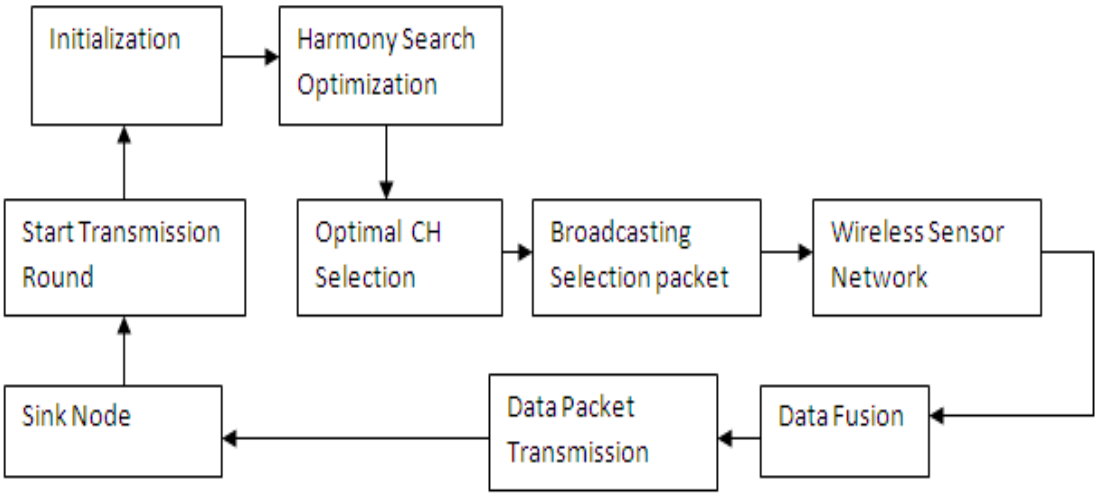

In this block diagram the Harmony search algorithm it is music based meta heuristic optimization algorithm which is analogous with a music improvisation process where musician continue to polish the pitches in order to obtain better harmony. By which it optimizing the energy consumption and minimizing intra-cluster distance of the network.

In this the base station computes HSA is designed and applied to optimally cluster the WSNs during the setup phase. The HSA approach used to minimize the objective function consists of five main steps as explained..the Initialize the optimization problem and algorithm parameters: In the formulated problem, HSA is applied to minimize the intra-cluster distances and optimize the energy consumption of the network, which is defined by the objective function. The solution vector is the identification (ID) of the CHs among the candidates in the network. Harmony Memory Size, the number of solutions vector in Harmony Memory Matrix, is selected. Other parameters used to create new solution vector such as Harmony Memory Considering Rate and Pitch Adjusting Rate are initiated. The maximum iteration of executing the algorithm (stopping criterion) is also set. A HM consisting of an HMS number of solution vectors for the formulated problem is randomly generated. Improvise a new harmony from the HM: After defining the HM .The improvisation of the HM is carried out by generating a New Harmony vector. Update the HM: f the objective function value for the new Harmony vector is better than the objective function value for the worst harmony in the HM.Go to step 3 until termination criterion is reached: The current best solution is selected from the HM after the termination criterion is satisfied. This is the solution for the optimization problem formulated.

CH selection process using by BS needs to select the CH with higher residual energy among the sensor nodes and then form the cluster with equal distribution of the sensor nodes based on their information of location and residual energy broadcasting selection packet sensor nodes work together to deliver information gathered from terrain to a sink.

Data Transmission process is the CHs collects data from all cluster members and transfer to the BS during the data transmission phase. The two phases are performed in each round of the network operation and is repeated periodically. After all of the nodes receive the ASG message, and the transmission schedule is initialized, the sensor nodes start to perform sensing task and transmit data to the CHs. Transmission power of cluster member nodes is optimized because of the minimum spatial distance to the CHs. Many cluster-based protocols have been proposed with the objective to maximize the network lifetime in the literature such as energy-aware routing,

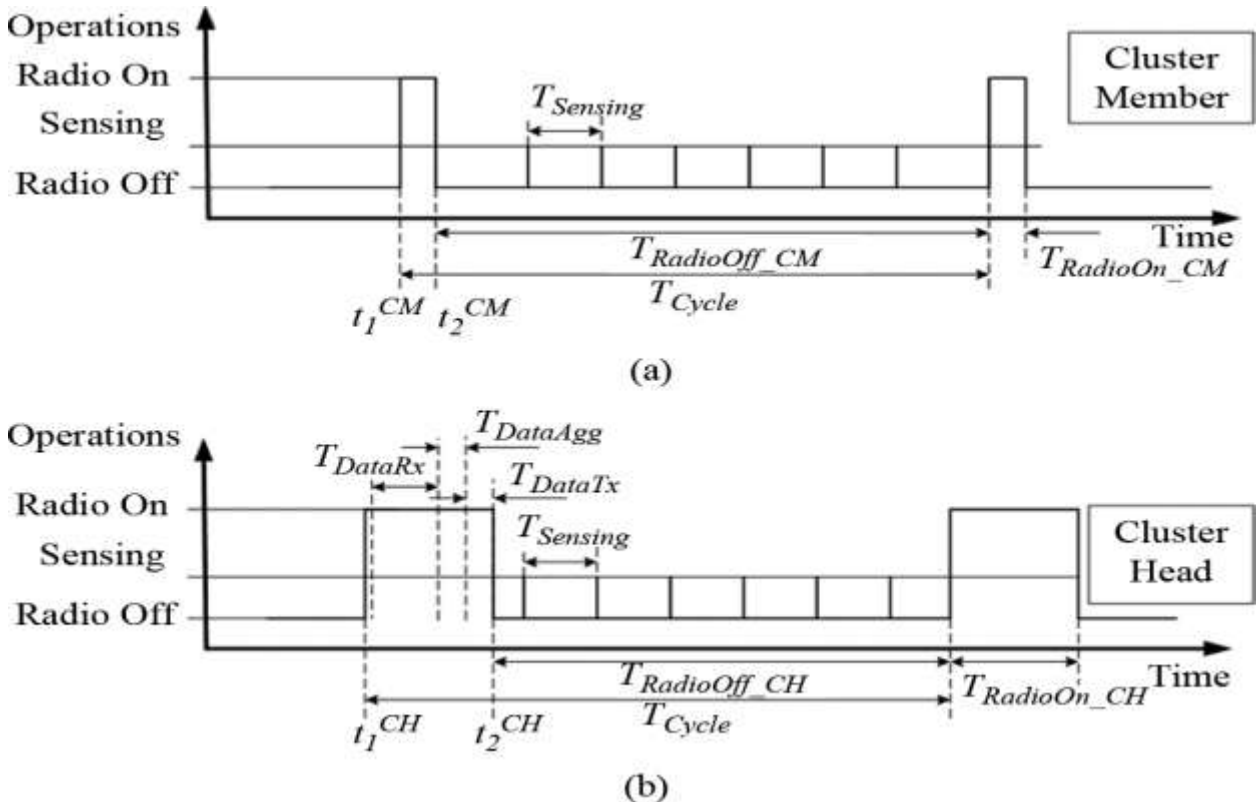

Fig1. Data transmission phase within a cluster for different types of sensor Nodes. (a) Cluster member. (b) Cluster head.

In the HSA, musical performance seeks a perfect state of harmony determined by aesthetic estimation, as the optimization algorithm seeks a best state (i.e., global optimum) determined by objective function value.

V RESULT AND DISCUSSION

Here the result is obtained the m- file output window contains the number of created nodes according to source nodes. Initially the window contains 50 nodes. To select cluster head using harmony search algorithm. The nodes can be communicated with cluster head.

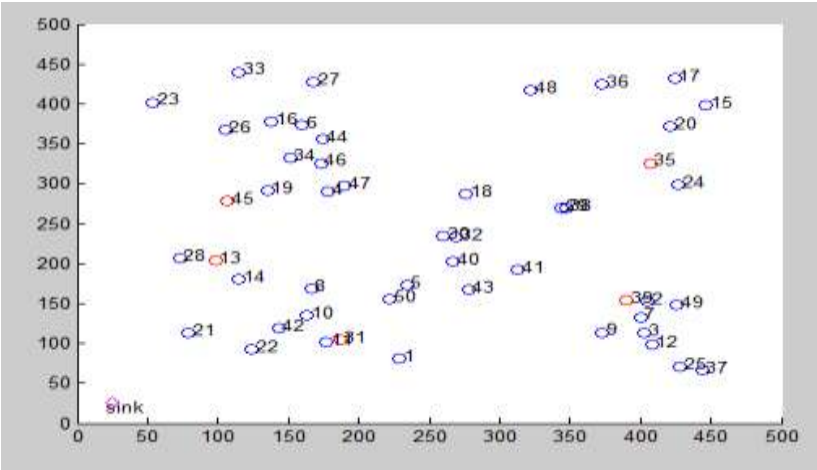

Fig2. Cluster head selection process

The implement the role of CH is receiving sensing packet and forwarding via neighbor CH to reach sink. The optimal number groups and its cluster head selection carried out Harmony search algorithm.

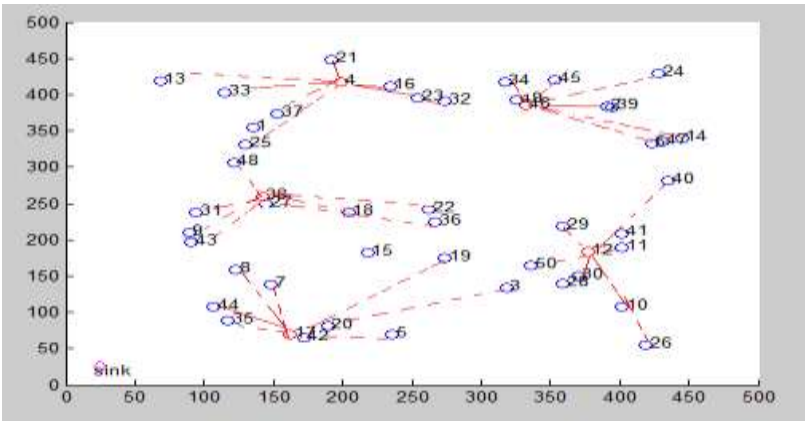

Fig3. Nodes are clustered into number of groups

Number of groups and CH selected by Harmony Search run at Centralized node (sink) . Selected CH collect packets and retransmit those packets to sink through neighbor CH using Hierarchical CH route nodes.

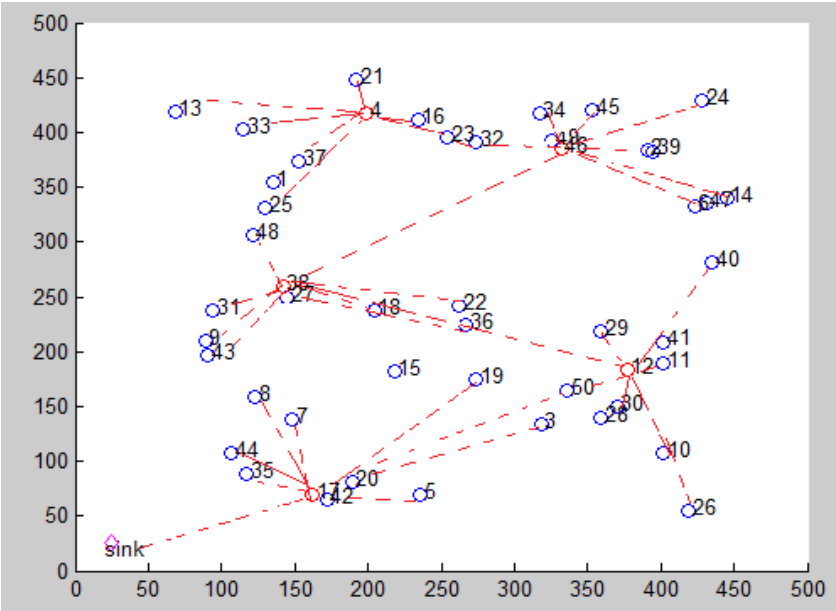

Fig4. Cluster Head using Hierarchical Cluster Head route nodes

VI CONCULSION

In this paper, we have presented The implementation of a centralized cluster-based protocol using HAS optimization algorithm..The experimental results show that, by using HSACP, the network lifetime is extended significantly when compared with LEACH-C and FCMCP. It is clear from the result that HSA can provide fast convergence with the best fitness value is comparable with FCM. Thereby, it enables HSA to be applied for real -time configuration of the network. Additionally, the proposed frame work for designing clustering protocols can also be used as a tool for real-time operation to investigate other optimization algorithms for WSNs. The efficient use of battery power source in the sensor node is most desirable option for prolong the life time of wireless sensor network. the energy consumption are reduced based on the algorithm using cluster head selection and extend the life time of work.

VII APPLICATION

Military applications

Environmental monitoring

Health applications

Forest fire detection

VIII ADVANTAGES

Sink Node take care of Head node Selection.

Energy Consumption of sensor node reduced.

Achieve extended network life.

REFERENCES

[1] B. Zhang, R. Simon, and H.Aydin, "Harvesting-aware energy management for time-critical wireless sensor networks with joint voltage and modulation scaling," IEEE Trans. Ind. Inf., vol. 9, no. 1, pp. 514–526,Feb. 2013.

[2] J. S. Lee and W. L. Cheng, "Fuzzy-logic-based clustering approach for wireless sensor networks using energy predication," IEEE Sensors J., vol. 12, no. 9, pp. 2891–2897, Sep. 2012.

[3] P. Yadav, R. Kumar ance comparison of optimization algorithms for clustering in wireless sensor networks,"in Proc. IEEE Int. Conf.Mobile Adhoc Sensor Syst., Pisa, Italy,Oct. 2007, pp. 1–4.

[4] Y. K. Tan and S. K. Panda, "Energy harvesting from hybrid indoor ambient light and thermal energy sources for enhanced performance of wireless sensor nodes," IEEE Trans. Ind. Electron., vol. 58, no. 9, pp. Sep. 2011.

[5] D.C. Hoang, R. Kumar, and S. K. Panda, "Fuzzy C- means clustering protocol for wireless sensor networks," in Proc. IEEE Int. Symp. Ind. Electron., 2010

[6] J. d .O. Valente and W. Pedrycz, Advances in Fuzzy Clustering and its Applications. New York, NY, USA: Wiley, 2007.

[7] S. Lindsey and C. S. Raghavendra, "Pegasis: power efficient gathering in sensor information systems," in Proc. IEEE Aerospace Conf., Big Sky, MT, USA, Mar. 2002, pp. 1125–1130.

[8].S. K. Panda, and C. S. Chang, "Energy-efficient thrust allocation for semi-submersible oil rig platforms using improved harmony search algorithm," IEEE Trans. Ind. Inf., vol. 8, no. 4, pp.913–924, Nov. 2012.

Biographical Notes

Mrs. M. Mathivathani is presently pursuing M.E. final year in Electronics and Communication Engineering Department (Specialization in Embedded System Techologies) from Raja College of Engineering and Technology, Madurai, Tamilnadu,India.

Ms. R. Karpaga Priya is presently pursuing M.E. final year in Electronics and Communication Engineering Department (Specialization in Embedded System Techologies) from Raja College of Engineering and Technology, Madurai, Tamilnadu,India.

DESIGN OPTIMIZATION FOR VIBRATION LEVEL OF ROOT BLOWER WITH LOAD CONDITION

Gomatesh V. Malikwade[1], Swapnil S. Patil [2], Aditya A. Magdum[3], Avadhoot V. Khandare[4], Prof.Dr.S.H.Sawant[5]

[1,2,3,4] UG Student, [5]Professor, Dr. J. J. Magdum College of Engineering, Jaysingpur, Kolhapur, Maharashtra,(India).

ABSTRACT

Vibration is a mechanical phenomenon whereby oscillations occur about an equilibrium position. The oscillations may be periodic. More often, vibration is undesirable, wasting energy and creating unwanted sound – noise.When a machine moves, its motion induces vibration in its structure.The root blower is also known as positive displacement pump. It is used in conditions ranging from strong vacuum to high pressure in all branch of industry. The Root's Blower consists of 2 or 3 lobe of rotors and rotate in synchronous and opposite direction by two timing gear. At low speed its vibration can be ignored, but at moderate and high speed this vibration become larger and various parts of machines no longer move the way in which they were indented to move. The vibration amplitude is measured by using FFT (Fast Fourier Transform) analyzer with two channel accelerometer probe. Accelerometer is a transducer which converts mechanical vibration into electrical signal. The study is carried out at 3000 RPM and 600 mbar pressure condition and at various isolation mountings.

Keywords: Accelerometer, FFT Analyzer, Isolation Mounting, Root Blower, Transducer.

1.INTRODUCTION

In the recent trends we are much more ahead in the modern machine designs and technologies which will fulfil the today's need of industries. At present the main requirement of the industries is to increase the efficiency and reliability of equipment. For these requirement we have to optimize design with the help of various techniques. As the study is concerned about optimization in design of root blower one of the method for optimizing design is reducing the vibration in root Blower.

Vibration signifies to and fro motion of objet about equilibrium configuration. The oscillations may be periodic such as the motion of block attached to spring or random such as the ground vibrations of building structure due to earthquake. Vibration is occasionally "desirable". For example, the motion of a tuning fork, the reed in a woodwind instrument or harmonica, or mobile phones or the cone of a loudspeaker is desirable vibration, necessary for the correct functioning of the various devices[1].

More often, vibration is undesirable, wasting energy and creating unwanted sound – noise. For example, the vibration motions of engines, electric motors, or any mechanical device in operation are typically unwanted. Such vibrations can be caused by imbalances in the rotating parts, uneven friction, the meshing of gear teeth, etc. Careful designs usually minimize unwanted vibrations.

When a machine moves, its motion induces vibration in its structure. At low speed its vibration can be ignored, but at moderate and high speed this vibration become larger and various parts of machines no longer move the way in which they were indented to move. Many machines in industries have performance limitations due to vibration problems.

In the precision manufacturing field, the major structural components are often made of rigid and massive elements. Those mechanisms are so fluctuated by swaying of building and resonating of ground floor that the precision gets lower. As a result, quality of products is declined. So far, to minimize the influences of result from external irregular vibration, various technical methods of the absorbing vibration are used. For example, vibration isolation table which use air damper and heavy granite surface plate are used. But, these devices need high cost and low mobility.

The methods for vibration control such as Force Reduction, Mass Addition, Tuning, Dynamic Vibration Absorber, Isolation, and Damping are usually accepted in industries. This paper will briefly introduce each method, and describe practical methods for their application. Several scenarios and case studies will be presented, with emphasis on pragmatic solutions to industrial vibration problems [2] [3].

1.1 Root Blower

Twin lobe or tri lobe blowers fall under this category. They have higher efficiency at moderate compression ratios and are most efficient in the compression ratios of 1.1 to 1.2.They are used where constant flow rate at varying discharge pressures .These are generally available for capacities 10 m^3/ hr. to 10000 m^3/ hr. for pressures up to 1 Kg/ cm^2 in single stage construction[4].

The twin lobe rotor belongs to the category of positive displacement blower. They consists of a pair of involute shaped lobes/ rotors rotating inside a oval shaped casing, closed at ends by side plates. One end is a driving lobe which is driven by the external power source, while the driven gear is driven by a pair of timed spur gears. Both the lobes thus rotate at equal speed and in opposite direction. As the rotor rotates, the air is drawn inside the inlet side of the cylinder and forced out against the outlet side against system Pressure.

With each revolution four such volumes are thus displaced. The air which is thus forced out is not allowed to come back due to the small internal clearance within the internals of the machine except a very small amount called as “slip”. There is no change in the volume of the air within the machine but it merely displaces the air from suction end to the discharge end against the discharge system resistance i.e. no compression takes place in the machine .Since the lobe run within the machine with finite clearances, no internal lubrication is required. The air thus delivered is 100% oil free. These blowers delivers practically constant flow rate independent of the discharge pressure conditions. The flow rate depends largely on the operating speed. Due to these constructional features it has following distinct characteristics.

1. The flow is depending on the operating speed.
2. The input power is totally depend upon the pressure across the machine.
3. The suction and discharge pressure are determined by the system conditions.
4. The temperature rise of the discharged air is largely dependent on the differential pressures across it.

1.2 Test Parameters

Test parameters of blower consist of parameters such as vibration amplitude. Blower performance is monitored with respect to this parameter. After monitor performance of blower observation are as below such as Vibration amplitude=10 mm/s.

II PRACTICAL METHODS FOR VIBRATION CONTROL OF INDUSTRIAL EQUIPMENT

i. **Force Reduction** of excitation inputs due to, for example, unbalances or misalignment will decrease the corresponding vibration response of the system.

ii. **Mass Addition** will reduce the effect (system response) of a constant excitation force.

iii. **Tuning** (changing) the natural frequency of a system or component will reduce or eliminate amplification due to resonance.

iv. **Isolation** rearranges the excitation forces to achieve some reduction or cancellation.

v. **Damping** is the conversion of mechanical energy (vibrations) into heat.

2.1. Isolation

Isolationreduces the transmitted vibration response of a system by rearranging energy so that inertia (mass) opposes force. Resilient supports (isolators), typically elastomeric, spring, and/or pneumatic, decouple a system from force inputs, and cause the isolated system to be out of phase with the force inputs[5].

Referring to Fig. 1, below, the frequency ratio, f / f_n, must be greater than $\sqrt{2}$ (isolation zone) for isolation to be successful. As the frequency ratio increases, force transmitted (vibration response) decreases. Systems where the frequency ratio is below $\sqrt{2}$, (amplification zone) are not suitable for isolation.

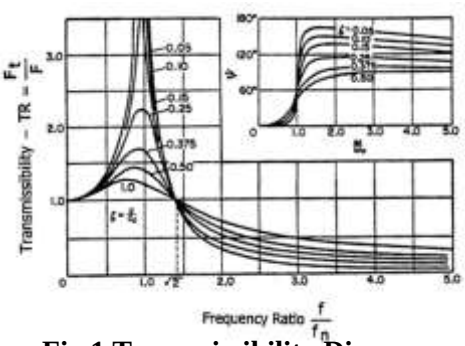

Fig.1.Transmissibility Diagram

III ASSESSMENT CRITERIA

In this guideline the vibration severity of blower is classified on the basis of following parameter:

- Machine group corresponding to machine design and bearing
- Type of machine mounting

Machine mountings are subdivided into two groups on the basis of their elasticity of foundation. Normally blower units are installed on the rigid base frames together with their drives (Engine, gearing) and ancillary systems. This base frame can be mounted directly upon the foundation (concrete slab, industrial building flooring, etc.) and bolted down permanently to it (rigid mounting).

Another possibility is to mount only the drive unit (motor and blower) or even the entire set on defined spring elements so as to insulate the foundation (intermediate floor of building, ship's deck, base frame of acoustic hood, etc.) against vibration excitations. This is very often encountered with smaller to mid-range mass-production blower units but in experimental cases also with process-gas blower.

Should it be necessary in doubtful case to decide whether a sub frame is rigid or resilient, if this guideline is used (rather than DIN ISO 19816-3) the entire mass and vertical spring stiffness of the mounting of compressor set part in question must be taken into consideration. A resilient (low tuned) mounting of the blower set means that the corresponding first vertical natural frequency of total vibration system consisting of blower and sub frame is at least less than the smallest existing relevant exciter frequency (with the blower this is the simple rotational frequency of secondary rotor, in the overall system in most cases the rotational frequency of drive motor even if this is installed on a base frame).With resiliently mounted machines the vibrational level tends to be higher than is the case with a rigid mounting.

IV EVALUATION

This guideline describes in a generalized from the two criteria for evaluating the housing and rotor vibrations of root blowers. One criterion relates to the magnitude of the broadband measured vibration, the other relates to change in the magnitude of vibration irrespective of whether it increases or decreases [5].

V TEST METHODOLOGY

The root blower used for design optimization is as shown in Fig. 2. The blower is manufactured by Kulkarni Power tools Ltd. Model SR069. The test readings are taken with FFT analyzer. The accelerometer connection are made ready for taking the readings at three positions viz. vertical, horizontal and axial respectively at drive and non-drive end of blower[6].

Fig. 2: Test Set-up.

The Test Set-up is made for following three arrangements:

a) Flexible Arrangement: In Flexible Arrangement the blower is mounted on Flexible Spring Support.

b) Buffer Pad Arrangement: The Flexible Arrangement is replaced by Buffer Pad Arrangement.

c) Flat Pad Arrangement: The Buffer Pad Arrangement is replaced by Flat Pad Arrangement.

VI RESULT AND DISCUSSIONS

6.1. Fixed Arrangement

The readings are obtained by using FFT analyzer for Fixed Arrangement.

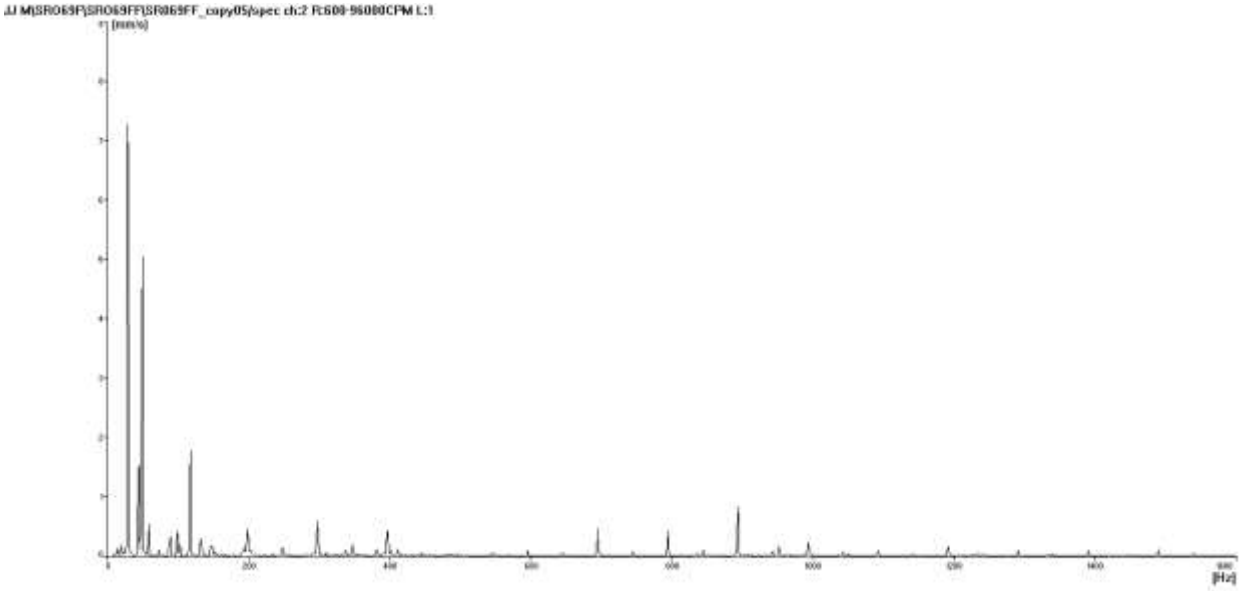

Fig. 3:Frequency Response Graph for Rigid Frame Arrangement.

Table: 1. RMS Values for Rigid Frame Arrangement

Blower Model: SR069				
Arrangement Type: RIGID Before Modification				
Remark: With FFT Analyser				
Blower rpm: 3000 RPM		Pressure: 600 mBar		
		Vibration [RMS]		
Reading no.1		V	H	A
RB Side	Drive	15.4	14.5	8.14
	Non Drive	14.8	14.7	10.8
BB Side	Drive	9.24	11.6	6.17
	Non Drive	8.02	7.27	9.2

6.2. Flexible Arrangement

The readings are obtained by using FFT analyzer for Flexible Arrangement.

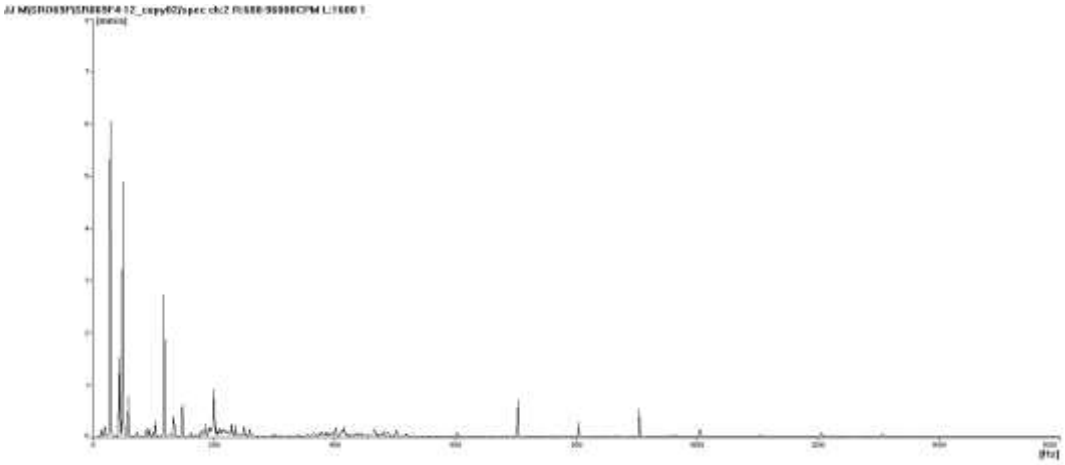

Fig.4: Frequency Response Graph for Flexible Type Arrangement.

Table: 2. RMS Values For Flexible Type Arrangement.

Blower Model: SR069				
Arrangement Type: Flexible Type Arrangement				
Remark: With FFT Analyser				
Blower rpm: 3000		Pressure: 600 mBar		
		Vibration [RMS]		
Reading no.1		V	H	A
RB Side	Drive	9.2	8.7	5.3
	Non Drive	8.4	8.12	6.4
BB Side	Drive	6.5	6.7	4.3
	Non Drive	7.7	6.1	5.8

Comparing the readings of Fixed Frame Arrangement and Flexible Arrangement it can be observed that the vibrations are reduced in the Flexible Arrangement.

6.3. Buffer Pad Arrangement

The readings are obtained by using FFT analyzer for Buffer Pad Arrangement.

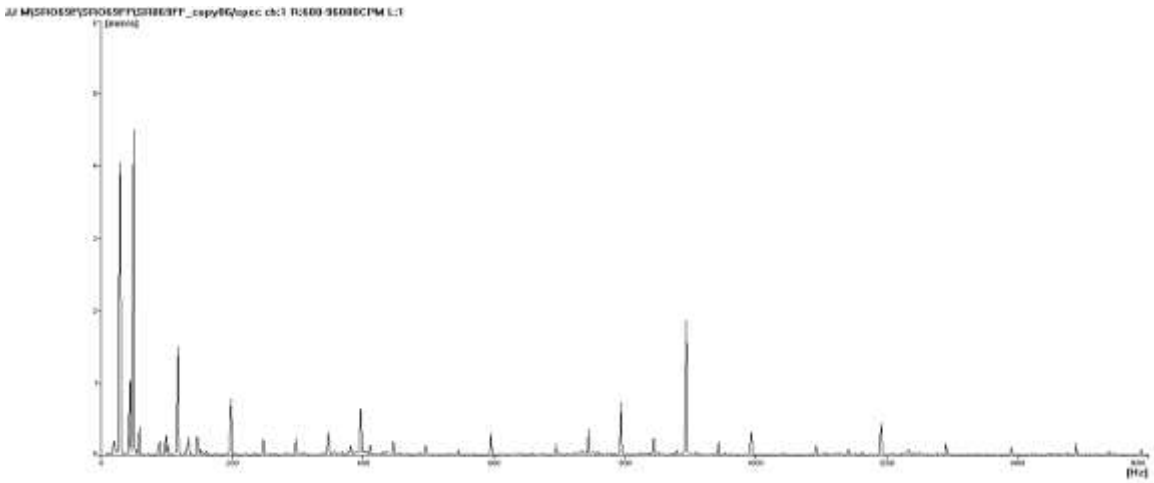

Fig.5: Frequency Response Graph for Buffer Pad Arrangement

Table: 3. RMS Values for Buffer Pad Arrangement

Blower Model: SR069				
Arrangement Type: Buffer Pad Arrangement				
Remark: With FFT Analyser				
Blower rpm: 3000		Pressure: 600 mBar		
		Vibration [RMS]		
Reading no.1		V	H	A
RB Side	Drive	7.9	7.3	3.5
	Non Drive	6.4	6.2	5.2
BB Side	Drive	5.15	6.3	2.13
	Non Drive	5.8	4.7	4.03

Comparing the readings of Flexible Arrangement and Buffer Pad Arrangement it can be observed that the vibrations are reduced in the Buffer Pad Arrangement

6.4. Flat Pad Arrangement

The readings are obtained by using FFT analyzer for Flat Pad Arrangement.

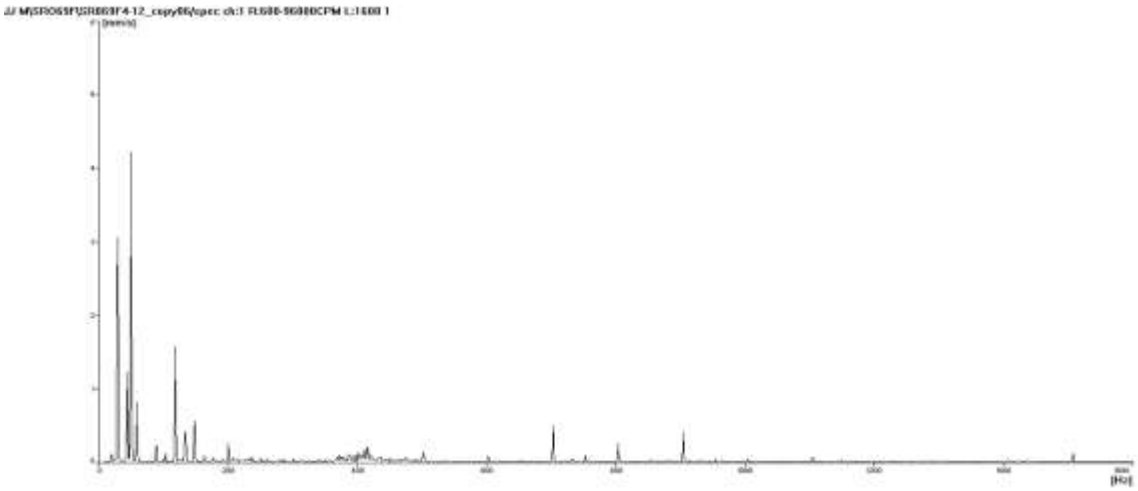

Fig.6:Frequency Response Graph for Flat Pad Arrangement.

Table:4 RMS Values for Flat Pad Arrangement

Blower Model: SR069				
Arrangement Type: Flat Pad				
Remark: With FFT Analyser				
Blower rpm: 3000		Pressure: 600mBar		
		Vibration [RMS]		
Reading no.1		V	H	A
RB Side	Drive	5.2	5.8	3.1
	Non Drive	4.1	4.6	3.7
BB Side	Drive	4.9	6.6	2.3
	Non Drive	5.1	4.3	3.5

Comparing the readings of Buffer Arrangement and Flat Pad Arrangement it can be observed that the vibrations are reduced in the Flat Pad Arrangement. This is due to the fact that the flat pad absorbs the vibrations which are then transmitted to the foundation.

VII CONCLUSION

To increase the performance of the Industrial equipment it is necessary to analyze the problem. There are many methods to control and minimize the vibrations in the equipment. But some of the important are discussed in this paper. With the help of techniques discussed in this paper will help to reduce the vibration occurred in the equipment. The vibration levels obtained in case of flat pad Arrangement are much less than other Arrangements. Therefore it is suggested to use Flat Pad Arrangement to reduce vibration level of Root Blower.

REFERENCES

[1]. Bently, Donald E. "Fundamentals of Rotating Machinery Diagnostics Bently Pressurized Bearings Pressure."*67th Annual National* Conference *of the* Indian *Psychiatric Society, ANCIPS 2015*.

[2]. D.K. Paul[1], S.N.Bagchi[2], "Vibration and Shock Isolation system Design for Equipment and Infrastructural Machineries", *International Journal of Multidisciplinary Sciences And Engineering*, June 2011.

[3]. J Michael Robichaud "Reference Standards for Vibration Monitoring and Analysis*",International ConferencesWorldwideConference Call for Papers*. Jan 2012.

[4]. Miss S. S. Salaskar, Dr. K. H. Inamadar, "Design and Manufacturing of Twin Lobe Roots Blower Using Steel Shaft", International Journal of Engineering Research and Applications (IJERA) ISSN: 2248-9622.

[5]. "VDI 3836", Measurement and Evaluation of Mechanical Vibrations of Screw Type Compressor and Roots Blower.

[6]. G.Malikwade,S.Patil, A.Magdum, A.Khandare, Prof.Dr.S.H.Sawant, Prof.A.S.Adadande, "Design Optimization for Vibration Level of Root Blower with No Load Condition", *The International Journal of Engineering and Science 2015.*

EVALUATION OF MECHANICAL PROPERTIES OF HYBRID SISAL FIBER REINFORCED COMPOSITES

G.Sundaravadivel [1], Dr.M.Aruna [2], S.Anish[3]

[1,3]Assistant Professor, Department of Mechanical Engineering, St.Joseph College of Engineering, Sriperumbudur, Chennai, TamilNadu, (India)

[2] Professors, Department of Mechanical Engineering, Velammal College of Engineering and Technology, Madurai, TamilNadu, (India)

ABSTRACT

Now –a- days natural sisal fiber reinforced composites has been a growing interest in utilizing natural fibers as reinforcement in sisal composite for making low cost materials in recent years.Fibre reinforced Composite is one such material, which has revolutionized the concept of high strength. Sisal/Glass fibres are strong and have light weight. Hybrid Composites are fabricated using raw sisal/glass with varying fibre weight percents 1:1 to 1:4 wt. %. The hybrid composites are fabricated by using hand layup method. The fabricated specimens are made according to the ASTM standards for different mechanical testing such as flexural and tensile tests. The present work is to study the effect of fiber loading on mechanical behavior of sisal fiber reinforced epoxy composites. Finally, the sisal/glass specimen surface morphology of the composites of fractured surfaces has been studied using SEM analysis.

I. INTRODUCTION

Natural fibres are renewable resources in many developing countries of the world.The interest in natural fiber-reinforced composite materials are rapidly growing their industrial applications and fundamental research. However, they do not undergo biodegradation easily, no health hazards. Such composites are termed as green composites, by using sisal. Banana, bamboo, coir, pineapple leaf fibre, etc. Several green composites have already been developed and their properties have been studied.

Research revealed that the behaviour of hybrid composites appears to be simply a weighted sum of the individual components in which there is a more favourable balance between the advantages and disadvantages inherent in any composite material. It is generally accepted that the properties of hybrid composite are controlled by factors such as nature of matrix; nature, length and relative composition of the reinforcements; fibre–matrix interface; and hybrid design etc.

The hybridization of the reinforcement in the composite shows greater tensile strength when compared to individual type of natural fibres reinforced. For all the composites tested the tensile strength of the composite increased for approximately 25% of weight fraction of the fibres and further for the increase in the weight

fraction of fibre the strength decreased, also it is found that for the hybrid combination of ridge guard and sisal fibres there is 65% increase in the tensile strength

Glass fibre reinforced composites due to their high specific strength and specific stiffness have become attractive structural materials not only in weight sensitive aerospace, automobile industries, but also in marine, armour, railways, civil engineering structures, sports goods etc. Epoxy resin is the most commonly use polymer matrix with reinforcing fibres for advanced composites applications.

Surface Treatment of the natural fibres was performed by rinsing the fibres in 10% NaOH solution for 24 hours and followed by washing with water. NaOH treatment removed wax and fatty substances and changed surface topography of the fibres.

II. RELATED WORK

Scanning electron micrographs obtained from fracture surfaces were used for a qualitative evaluation of the interfacial properties of coir /epoxy and compared with glass fibres. Length of the fibres was in the range between 8 and 337 mm.

The paper demonstrates the possibility of expressing each of the model parameters as a function of single variable that is stress ratio, maximum stress level, or a material-dependent constant. Glass fibre reinforced plastic (GFRP) with similar mechanical and geometrical properties to the multiyear spring, was designed, fabricated (hand-layup technique) and tested. Computer algorithm using C-language has been used for the design of constant cross-section leaf spring. In this paper, only a mono-leaf composite leaf spring with varying width and varying thickness is designed and manufactured. Computer algorithm using C-language has been used for the design of constant cross-section leaf spring. The results showed that a spring width decreases hyperbolically and thickness increases linearly from the spring eyes towards the axle seat. The fabrication of composite leaf spring from unidirectional GERP. Composite leaf spring was fabricated using wet filament winding technique. In the present work, the hand lay-up process was employed. The templates (mould die) were made from wood and plywood according to the desired profile obtained from the computer algorithm.

The selected glass fibre is woven roving 360 GSM and epoxy resin is 520F with hardener 758. The fibres are cut into the required length of the leaf spring and are layered to get the final shape of the leaf spring. For every 100 parts by weight of Epoxy resin, 10 – 12 parts by weight of hardener 758 is mixed well at a temperature of 20 – 40 °C the fabricated composite leaf spring. Proposed an analytical micromechanical self-consistent approach dedicated to mechanical states prediction in both the fibre and the matrix of composite structures submitted to a transient hygroscopic load. The time and space dependent macroscopic stresses, at ply scale, are determined by using continuum mechanics formalism. The reliability of the new approach is checked, for carbon–epoxy composites, through a comparison between the local stress states calculated in both the resin and fibre according to the new closed-form solutions and the equivalent numerical model.

III. PROPOSED WORK

Sisal fiber is collected from rural area. The sisal leaves and leaf stem were removed and it was immersed in water retting tank for 4 weeks, followed by hand rubbing and rinsing in water till the unwanted greasy material was dissolved and fine fiber was extracted. Finally, the extracted fiber once again washed thoroughly in plenty of clean water to remove the surplus waste. Continuous fiber was obtained with length up to 1.7 m. The obtained fiber was dried under sun for 1 week. The average diameter of the fiber used for the composite preparation was between 0.2 and 0.3 mm.

Figure 1. Extracted Sisal Fibre

Alkali treatment improves the fibre-matrix adhesion due to the removal of natural and artificial impurities. This treatment increases surface roughness resulting in better mechanical interlocking and the amount of cellulose exposed on the fibre

Figure 2.Alkali Treated Sisal Fibre

Surface. The dry fiber was treated with distilled water 10% solution of NaOH for 24 h smoking to remove the unwanted soluble cellulose, hemi cellulose, pectin, lignin, etc. **(12 11)** from the fiber After 2 h the fiber was washed thoroughly in distilled water to remove excess of NaOH and dried at 60°C for 24 h.

The sisal fiber and E- Glass fibers are mixed with epoxy resin by simple mechanical stirring and the mixture was poured into various moulds, keeping in view the requirements of various testing conditions and characterization standards. The composite samples of nine different compositions (S 1 to S-4) are prepared. The composite samples S-1 to S-4 are prepared in three different percentages of Glass and sisal fibers (1:1wt %, 1:2wt % , 1:3wt % and 1:4wt%). This is done while keeping the epoxy content at a fixed percentage (i.e. 80 wt %). The composition and designation of the composites prepared for this study are listed in the following table. The samples have been prepared by varying the fiber percentages and fiber loading.

Composites	Compositions
S-1	Epoxy (70 wt%)+Glassfibre (15wt%)+Sisal fibre (15wt%)
S-2	Epoxy (70 wt%)+Glass fibre (10wt%)+Sisal fibre (20wt%)
S-3	Epoxy (70 wt%)+Glass fibre (7.5wt%)+Sisal fibre (22.5wt%)
S-4	Epoxy (70 wt%)+Glass fibre (16wt%)+Sisal fibre (24wt%)

For making the composite, a mol ding box (M.S) was prepared with dimensions of 250 x150 x3mm mould cavity. The mould box was coated with a thin layer of aqueous solution of poly vinyl alcohol (PVA) which acts as a good releasing agent. Further a thin coating of hard wax was laid over it and finally another thin layer of PVA was coated. Each coat was allowed to dry for 20 min. at room temperature. A 3 mm thick plate was made from the epoxy and hardener taken in the ratio of 100 and 10 parts by weight respectively. Then the moulding box was loaded with the matrix mixture and sisal & glass fibre with varying percentage was placed at 300C for 4 hours to complete the curing. After curing, the plate was removed from the moulding box with simple tapering and it was cut into samples.

A Hacksaw blade was used to cut each material into smaller pieces, for various experiments:

- TENSILE TEST- Sample was cut into dog bone shape (120x30x3) mm.
- FLEXURAL TEST- Sample was cut into flat shape (80x13x3) mm, in accordance with ASTM standards. Show the Fig 3.2

Fig 3. Flat Bar Shape

The tensile test was performed on all the three samples as per ASTM D3039-76 test standards. The tension test is generally performed on flat specimens. A uni-axial load is applied through the ends. The ASTM standard test recommends that the specimens with fibers parallel to the loading direction should be 11.5 mm wide. Length of the test section should be 120 mm. The test-piece used here was of dog-bone type and having dimensions according to the standards. The tension test was performed on all the three samples as per ASTM D3039-76 test standards.

Fig 4. UTM Machine Sample Unloaded Condition for Tensile Testing

All the specimens (composites) were of rectangular shape having length from 80 mm, breadth of 13 mm and thickness of 3 mm. A span of 50 mm was employed maintaining a cross head speed of 10mm/min. The strength of a material in bending is expressed as the stress on the outermost fibers of a bent test specimen, at the of failure. In a conventional test, flexural strength expressed in MPa is equal to

Flexural Strength = 3PL / 2bd2

Where P= applied central load (N)

L= test span of the sample (m)

b= width of the specimen (m)

d= thickness of specimen under test (m)

Scanning electron microscope was used for the morphological characterization of the composite surface. The samples are cleaned thoroughly, air-dried and are coated with 100 Å thick platinum in JEOL sputter ion coater and observed SEM at 20 kV. To enhance the conductivity of the composite samples a thin film of platinum is vacuum evaporated onto them before the micrographs are taken. The fracture morphology of the tensile fracture surface of the composites were also observed by means of SEM

Figure 5. SEM Set Up

IV. RESULTS & DISCUSSION

The composite specimens were tested as per ASTM standards. Tensile testing was done as per ASTM D 3039-76 with the help of TENSOMETER make KUDAL Instrument-20 KN model Universal Testing Machine at a crosshead speed of 5 mm/min. All the specimens (composites) were of rectangular shape having dimension of (120x30x3) mm3. The variation of the mean tensile strength at different fibre percentage is represented in (Fig no. 4) represent the variation of tensile strength of the composites **(**Fig no:1 **)** sisal fibre 10% and Glass fibre 10% with epoxy resin is used in this work. The graphs have been taking Displacement of fibre along the X-axis and Tensile strength Load N (MPa) along the Y-axis. Fig: 1; the combination of fibres used is Sisal and Glass. Show the Fig 4 tensile tested crack specimens.

Figure 6: Material Testing

In these Hybrid composites there is a considerable increase of tensile strength peak load 4236.6 N as the percentage of fibre increases to a maximum of 10% and then the strength increase. The experiment was conducted on both samples of sisal/glass combinations. The results are tabulated in the table 1.

COMPOSITES SAMPLE	LENGTH mm	BREADTH Mm	THICKNESS mm	EXTENSION Mm	MAXIMUM LOAD (N)
S-1	120	30	3	0.2	4236.6
S-2	120	30	3	0.5	313.8
S-3	120	30	3	0.3	715.9
S-4	120	30	3	0.1	2245.8

Shows combination of fibres used is Sisal and Glass fibre hybrid composites.The Sisal fiber increased 5wt% and Glass fiber 5wt% decreases tensile strength is decreases. The maximum peak load 313.8N and peak Displacement increase 12.22mm.

Shows the combination of fibres used is Sisal and Glass fibre composites. In these composites there is a considerable increase of tensile strength as the percentage of fibre increases to a maximum of 15% and then the strength decreases. The Sisal fibre increases 2% and then Glass fibre 1.5% decreases. The maximum Tensile

strength of 715N MPa is obtained for 20% fibre reinforcement, there by sisal fibre 15% increase in the tensile strength decreases. The combination of fibres used is Sisal and Glass hybrid composition. In these composites there is a considerable increase of tensile strength as the percentage of fibre increases to a maximum of 20% and then the strength increases. The Sisal fibre increases 1.5% and then Glass fibre 1.5% decreases. The maximum Tensile strength of 2245.8N Mpa

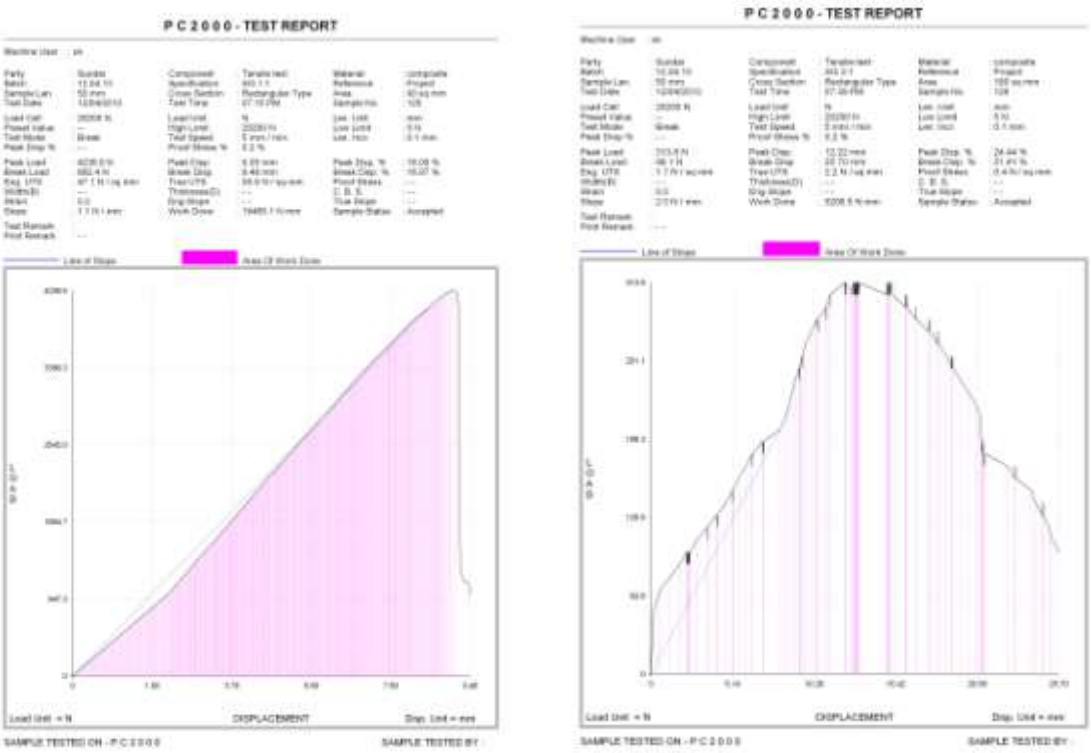

Figure 7. Effect of Fibre Loading on Tensile Strength of Composites

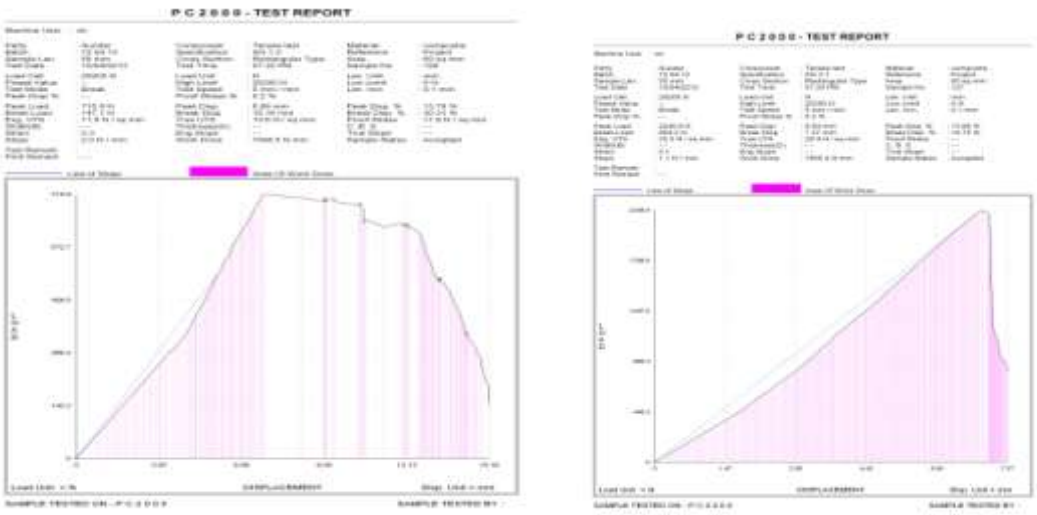

Figure 8. Effect of Fibre Loading on Tensile Strength of Composites.

To probe the bonding between the reinforcement and matrix, the scanning electron micrograms of fractured surfaces of Sisal/Glass reinforced epoxy hybrid composites were recorded. These micrograms were recorded at different magnifications and regions. The analysis of the micrograms of the composites prepared under different conditions is presented in the following paragraphs

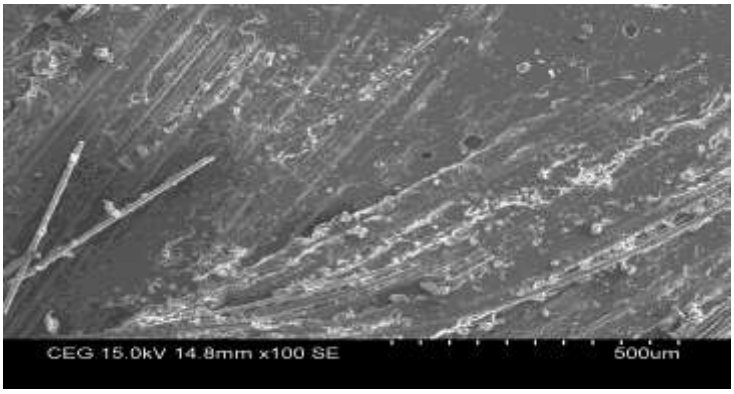

Figure 9. Scanning electron micrographs of bamboo fiber reinforced epoxy composite specimens

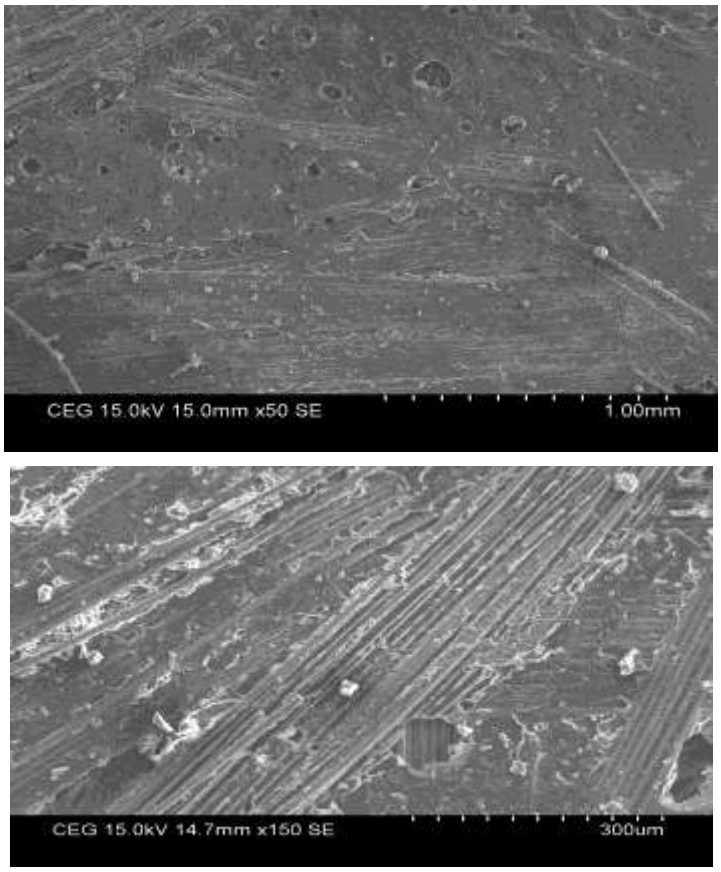

Figure 10. Scanning electron micrographs of bamboo fiber reinforced epoxy Composite specimens.

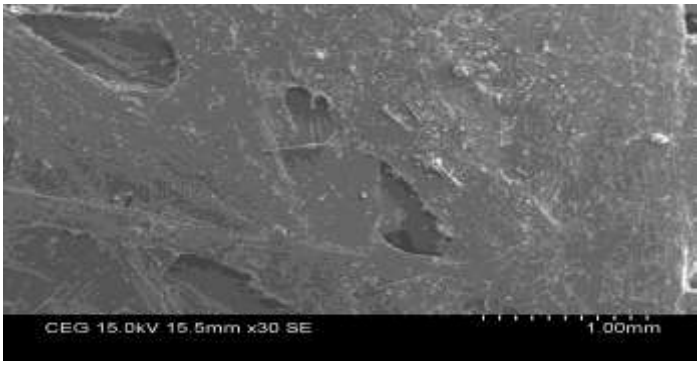

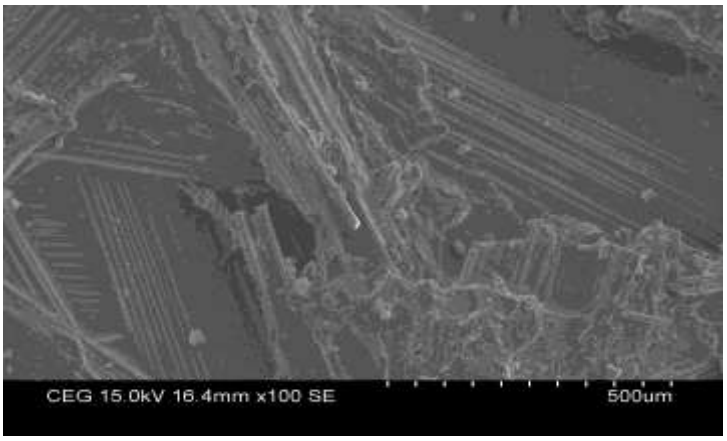

Figure 11. Scanning electron micrographs of sisal/glass fiber reinforced epoxy composite specimens

V.CONCLUSIONS

The experimental investigation on the effect of fiber loading on mechanical behavior of Hybrid sisal/glass fiber reinforced epoxy composites was conducted. Properties such as the Tensile strength, and flexural strength, were evaluated from various experiments. The experiments lead us to the following conclusions obtained from this study.

1. Successful fabrication of hybrid sisal/glass fiber reinforced epoxy composites is possible by simple hand lay-up technique.

2. Sisal fibres are effective reinforcement of polymers thus creating a range of technological applications beyond its traditional uses such as ropes, furniture, mats etc.

3. The tensile strength maximum loads of capacity 4236.6 N with 0.2mm elongation and sisal/glass both 15%wt of fibre content. The glass fibre increases tensile strength value increases but elongation degreases.

4. The load is applied on sisal/glass fibre hybrid composite, glass fibre increases to improve the tensile and flexural strength. At the same time the presence of sisal fibre in hybrid composite causes to decrease the tensile and flexural strength than the glass fibre composite.

5. The maximum flexural strength 166.7N, and sisal fibre percent increases and flexural strength decreases.

6. The fracture surfaces study of sisal/glass fiber reinforced epoxy composite after the tensile and flexural test has been done. From this study it has been concluded that the poor interfacial bonding is responsible for low mechanical properties.

REFERENCES

[1] Mwaikambo LY, Ansell MP. Chemical modification of hemp, sisal, jute, and kapok .bers by alkalisation. J Appl Polym Sci 2002; 84(12):2222–34.

[2] Van de Velde K, Kiekens P. Thermoplastic pultrusion of natural .bre reinforced composites. Comp Struct 2001; 54(2–3):355–60

[3]Gulur Siddaramanna Shiva Shankar, Sambagam Vijayarangan;Mono Composite Leaf Spring for Light Weight Vehicle – Design, End Joint Analysis and Testing (Accepted *07 April 2006)*.

[4] Kurumada akira, Nat inst for materials science, Toshiba denko ,Kurumada akira, Tanaka junzo, Suetsugu yasushi ;Carbon fibre reinforced composite material Molding containing calcium phosphate-based material, method of manufacturing the same, and artificial bone using the same.JP2004269333.

[5] V. Naga prasad naidu1, G.Ramachandra Reddy2, M.Ashok Kumar3, M.Mohan Reddy2, P. Noorunnisha Khanam2,S.Venkata Naidu2 " Compressive & impact properties of sisal/glass fibre reinforced hybrid composites" (11 July 2011).

[6]. Sreekala, M.S., M.G. Kumara, S. Joseph, M. Jacob and S. Thomas. 2000. Oil palm fibre reinforced phenol formaldehyde composites: influence of fibre Surface modifications on the mechanical performance. Applied Composite Materials 7:295-329.

[7] Vazquez A., Dominguez V. A., Kenny J. M.; Bagasse Fibre-Polypropylene Based Composites, *Journal of Thermoplastic Composite Materials*, 12 (1999) 477-497.

[8] Cao Y. Shibata S., Fokumoto I. "Mechanical properties of biodegradable composites reinforced with bagasse fibre before and after alkali treatment. Composites" Part A, *Applied Science and Manufacturing* 37 (2006) 423–429

[9] Govardhan Goud and R. N. Rao**; "**Effect of fibre content and alkali treatment on mechanical properties of Roystonea regia-reinforced epoxy partially biodegradable composites**"** [12 July 2010]

[10] Joseph, K. and S. Thomas. 1993. Dynamic mechanical properties of short Sisal fibre reinforced low density polyethylene composites. Journal of Reinforced Plastics and Composites 12(2):139-155.

[11]] L.M. Durão1a; Daniel J.S. Gonçalves2, João Manuel R.S. Tavares2, Victor H.C. de Albuquerque2,3, Túlio H. Panzera4, Leandro J. Silva4,A.A. Vieira2, A. M. Baptista2 the titled "Drilling Delimitation outcomes on glass and sisal reinforced plastics"

[12] Vemu.vara Prasad1 Tensile and Flexural Properties of Glass fibre-reinforced Polyester hybrid composites; (29 July 2011)

[13] Flávio de Andrade Silva1, Barzin Mobasher2, Romildo Dias de Toledo Filho3 titled "Advances in Natural Fibber Cement Composites: A Material for the Sustainable Construction Industry "

[14] Eichhorn SJ, Baillie CA, Zafeiropoulos N, Mwaikambo LY, Ansell MP, Dufresne A, et al."Current international research into cellulosic .bres and composites". the journal of J Mater Sci 2001;36(9):2107–31